HITACHI
Inspire the Next

VARIABLE FREQUENCY DRIVE

SJ300 Series

Sensorless Vector Control

Hitachi Industrial Equipment Systems Co., Ltd.

Hitachi's SJ300 Series Variable Frequency Drive Delivers Full Feature Performance Across A Wider Range of Demanding Applications Requiring High Starting Torque and Functional Versatility.

POWERFUL OPERATION WITH ADVANCED SENSORLESS VECTOR CONTROL

Powerful high torque performance has been accomplished using Hitachi's advanced sensorless vector control.

■High starting torque of 200% or greater at 0.5Hz

Torque characteristics

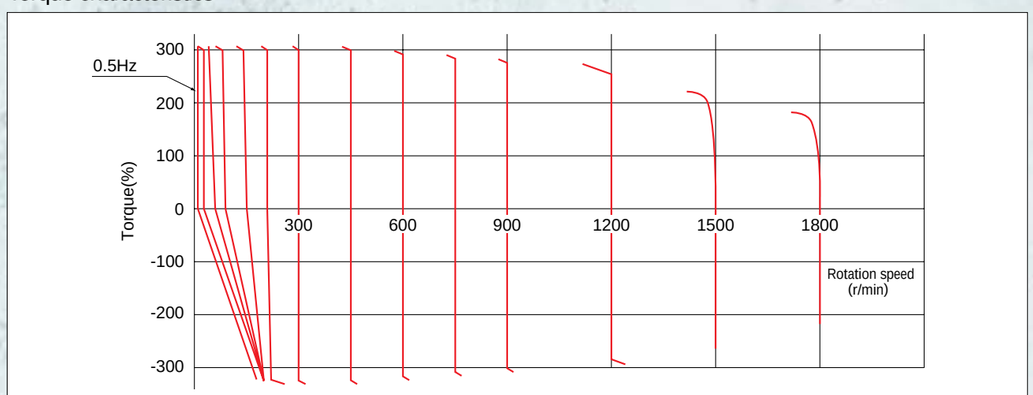

Example of SJ300-055LFU driving a Hitachi's standard 3-phase 5.5kW 4-pole totally enclosed type motor. <Base frequency of 60Hz> (Note: Torque characteristics may vary according to capacity.)

■Speed regulation at low speed has been drastically improved to enhance process stability and precision.

Comparison of speed regulation

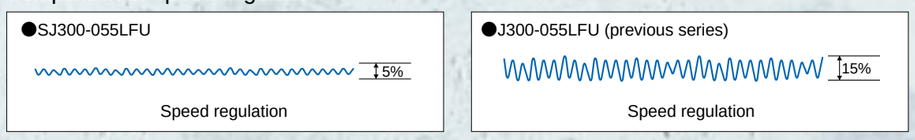

Frequency commanded by the inverter: 3Hz.
Motor: Hitachi's standard 3-phase 5.5kW 4-pole totally enclosed type motor.

■High torque of 150% near 0Hz

High torque of 150% near 0Hz is accomplished when the SJ300 drives a smaller motor by one frame size, and uses the "0Hz Domain" function.

■Adaptive/Basic auto-tuning

Auto-tuning to perform sensorless vector control can now be easily done both on-line and off-line.
Adaptive auto-tuning makes it possible for the motor characteristics to be updated automatically under" real time "ambient conditions (i.e. primary resistance changes as motor reaches" temperature rise ").

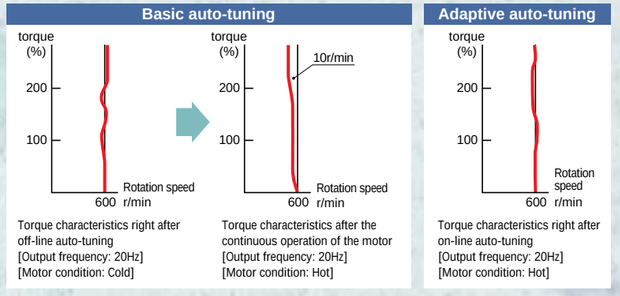

CONTENTS

	PAGE
Features	1 – 4
Standard Specifications	5 – 7
Dimensions	8 – 11
Operation and Programming	12
Function List	13 – 18
Terminals	19 – 20
Protective Functions	21
Connecting Diagram	22 – 23
Connecting to PLC	24
Wiring and Accessories	25
Accessories	26 – 41
For Compact Panel	42
Torque Characteristics, Derating Data	43
For Correct Operation	44 – 45

ISO 14001
EC97J1095

ISO 9001
JQA-1153

Hitachi variable frequency drives (inverters) in this brochure are produced at the factory registered under the ISO 14001 standard for environmental management system and the ISO 9001 standard for inverter quality management system.

VERSATILE FUNCTIONS ENCOMPASS MORE APPLICATIONS

■ Enhanced input/output function

- Intelligent terminal system is utilized on all input and output terminals.
  Sink/source type logic is user-selectable.
  In addition to PWM output terminal (FM), analog current (AMI) and analog voltage (AM) output monitor are incorporated as standard.
  The example (right) shows how a follower inverter can directly receive the analog output of the master inverter as its frequency command.

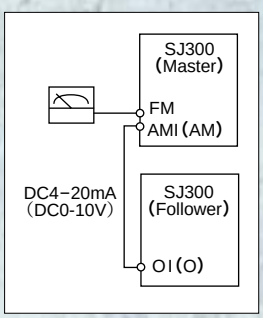

- An auxiliary speed input or " trim "can be made by an additional analog signal.

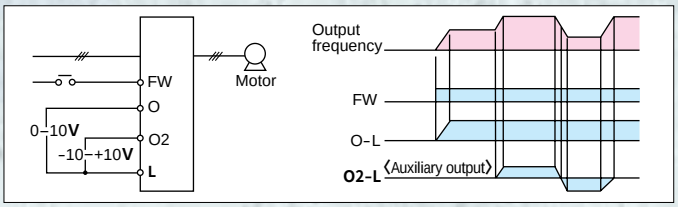

■ Multiple motor constant selection

Constants for up to three motors can be set. This added functionality is useful for controlling (multi-axis) motors via changeover.

■ Cooling fan mode selection

The cooling fan can be set to operate while the inverter is running, and stops when the inverter stops. This feature provides longer cooling fan life, and eliminates fan noise while the inverter is idle.

■ PID Control

Helps simplify overall system and saves initial cost by eliminating the need for a separate PID controller, Useful in many applications where temperature, pressure, flow, etc. must be controlled.

■ Deceleration and stop at power failure

SJ300 decelerates and stops the motor using regenerative energy from the motor even though the power is not supplied. Especially critical in some textile processes.

■ UP/DOWN speed control

Up/Down function fine-tunes output frequency. Convenient for a test-run.

■ Frequency scaling conversion

Displays the output frequency scaled by the conversion factor for" line "7 process speed.

■ 3-wire control

" Seal-in "start signal without an external device.

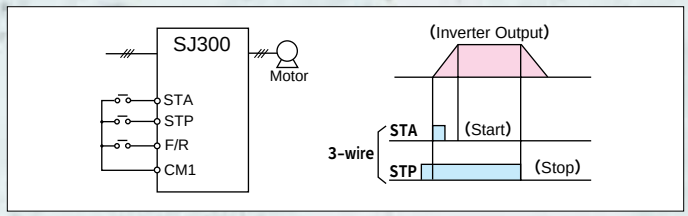

■ P/PI control selection

Provides stable control for carrier or trolley (material handling) operations. Useful for so-called "droop control"

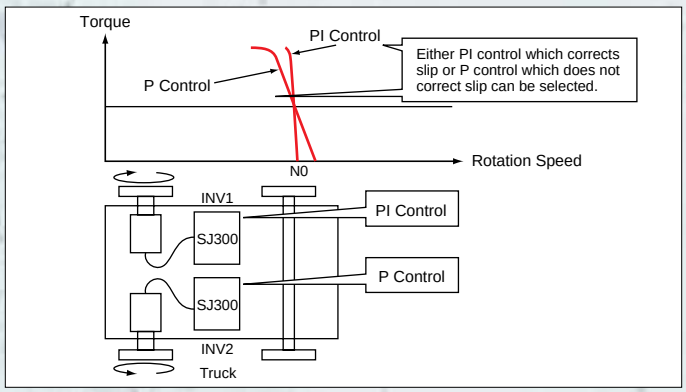

EASE OF MAINTENANCE

■ Easy-removable cooling fan and DC bus capacitor

Field replacement of cooling fan(s) and DC bus capacitors can be accomplished in a fraction of the time.

■ Removable control circuit terminals

Eliminates control rewiring when field replacing the SJ300.

ENVIRONMENTAL FRIENDLINESS

■ EMI filter

EMI filters to meet European EMC (EN61800-3, EN55011) and low voltage directive (EN50178) are available options for system conformance.

■ Reduced noise from main circuit power supply and control circuit power supply

Disturbance voltage of the main circuit power supply and of the control circuit power supply has been improved by approximately 15dB(μV) and 20dB(μV) respectively compared to our previous model (J300), resulting in significant reductions to noise interference with sensors and other peripheral devices.

- Disturbance voltage of the main circuit power supply
  (It does not comply with European EMC directive. To meet the EMC directive, please use an EMI filter.)

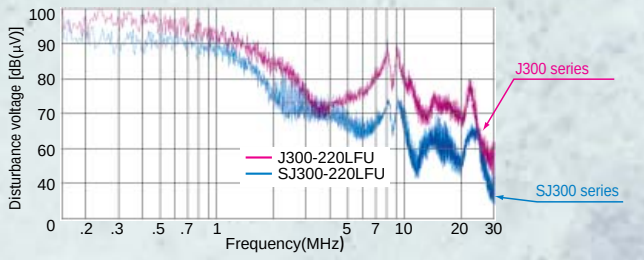

- Disturbance voltage of the control circuit power supply
  (Disturbance voltage of terminal L or CM1)

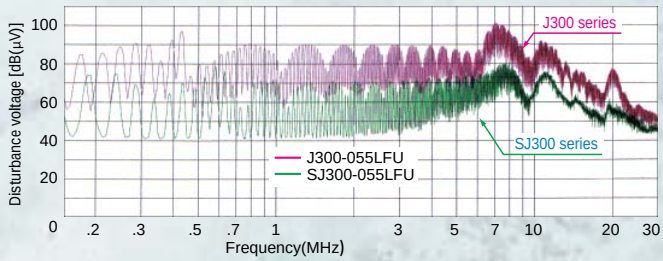

■ Harmonics mitigation

Terminals for the connection of a DC Reactor are provided as standard for harmonics suppression.

■ Control of voltage of micro serge

Suppressing the motor terminal voltage less than *2xE [V]* by improving the control method of PWM output.
Input voltage : 400VAC (In the case)
Motor terminal voltage : 1,131V ($400V \times \sqrt{2} \times 2$)

■ Improvement of environment

The printed circuit board inside an inverter is varnish coating specification as standard.

EASE OF OPERATION

■ Digital operator panel

Standard digital operator panel (OPE-S(CE version), OPE-SRE(UL version)) is removable for remote control, and has easy-to-see 4-digit display and LEDs to indicate the unit being monitored.

■ Multilingual operator with copy function

A multilingual operator with copy function (SRW-0EX) which displays six languages - English, French, German, Italian, Spanish, and Portuguese is available as an option.

■ USER SELECTION OF COMMAND FUNCTIONS ("Quick Menu")

User can select frequently used commands and store them for fast reference.

■ Built-in RS-485

RS-485 is provided as standard for ASCII serial communication.

■ Programming software

Optional PC drive configuration software which runs on Windows® operating system is available.

PROTECTION FOR VARIOUS INSTALLATION ENVIRONMENTS

Standard enclosure protection for SJ300 is IP20 (NEMA1*). For IP54 (NEMA12), please contact Hitachi sales office.

*Up to 22kW. An Optional conduit box is required for 30kW to 55kW to meet NEMA1.

GLOBAL PERFORMANCE

■ Conformity to global standards

CE, UL, c-UL, and C-Tick approvals

■ Network compatibility

SJ300 can communicate with DeviceNet™, PROFIBUS®, LONWORKS®, Modbus®RTU*1, and Ethernet™*2 with communication options.

*1,*2 Being Planned

■ MODEL NAME INDICATION

SJ300 - 004 L F U

- Series Name
- Applicable Motor Capacity
  004:0.4kW(1/2HP)
  |
  1500:150kW(200HP)
- Power Source
  L:3-phase 200V class
  H:3-phase 400V class
- F:With Digital Operator
- U:UL version for North America
  E:CE version for Europe

■ MODEL CONFIGURATION

Applicable motor capacity in kW (HP)	3-phase 200V class	3-phase 400V class
0.4(1/2)	SJ300-004LFU	
0.75(1)	SJ300-007LFU	SJ300-007HFU/E
1.5(2)	SJ300-015LFU	SJ300-015HFU/E
2.2(3)	SJ300-022LFU	SJ300-022HFU/E
3.7(5)	SJ300-037LFU	SJ300-040HFU/E
5.5(7.5)	SJ300-055LFU	SJ300-055HFU/E
7.5(10)	SJ300-075LFU	SJ300-075HFU/E
11(15)	SJ300-110LFU	SJ300-110HFU/E
15(20)	SJ300-150LFU	SJ300-150HFU/E
18.5(25)	SJ300-185LFU	SJ300-185HFU/E
22(30)	SJ300-220LFU	SJ300-220HFU/E
30(40)	SJ300-300LFU	SJ300-300HFU/E
37(50)	SJ300-370LFU	SJ300-370HFU/E
45(60)	SJ300-450LFU	SJ300-450HFU/E
55(75)	SJ300-550LFU	SJ300-550HFU/E
75(100)		SJ300-750HFU/E
90(125)		SJ300-900HFU/E
110(150)		SJ300-1100HFU/E
132(175)		SJ300-1320HFE
150(200)		SJ300-1500HFU
400(530)		SJ300-4000HFU/E

- Windows is a registered trademark of Microsoft Corp. in the U.S. and other countries.
- DeviceNet is a trademark of Open DeviceNet Vendor Association.
- PROFIBUS is a registered trademark of Profibus Nutzer Organization.
- LONWORKS is a registered trademark of Echelon Corporation.
- Modbus is a registered trademark of Modicon Inc.(Schneider Automation International).
- Ethernet is a trademark of Xerox Corporation.

STANDARD SPECIFICATIONS

Item			200V Class														
Model SJ300-XXX	UL version		004LFU	007LFU	015LFU	022LFU	037LFU	055LFU	075LFU	110LFU	150LFU	185LFU	220LFU	300LFU	370LFU	450LFU	550LFU
	CE version		-	-	-	-	-	-	-	-	-	-	-	-	-	-	-
Enclosure (*2)			IP20 (NEMA 1)*1														
Applicable motor (4-pole, kW(HP)) (*3)			0.4(1/2)	0.75(1)	1.5(2)	2.2(3)	3.7(5)	5.5(7.5)	7.5(10)	11(15)	15(20)	18.5(25)	22(30)	30(40)	37(50)	45(60)	55(75)
Rated capacity (kVA)		200V	1.0	1.7	2.5	3.6	5.7	8.3	11	15.9	22.1	26.3	32.9	41.9	50.2	63.0	76.2
		240V	1.2	2.0	3.1	4.3	6.8	9.9	13.3	19.1	26.6	31.5	39.4	50.2	60.2	75.6	91.4
Rated input voltage			3-phase (3-wire) 200−240V (±10%), 50/60Hz														
Rated input current (A)			3.3	5.5	8.3	12	18	26	35	51	70	84	105	133	160	200	242
Required power supply capacity (kVA)			0.8	1.5	3	4.4	7.4	11	15	22	30	37	44	60	74	90	110
Rated output voltage (*4)			3-phase (3-wire) 200−240V (Corresponding to input voltage)														
Rated output current (continuous) (A)			3	5	7.5	10.5	16.5	24	32	46	64	76	95	121	145	182	220
Control method			Line to line sine wave pulse-width modulation (PWM) control														
Output frequency range (*5)			0.1−400Hz														
Frequency accuracy			Digital: ±0.01% of the maximum frequency, Analog: ±0.2%(25±10℃)														
Frequency resolution			Digital setting: 0.01Hz, Analog setting: (Maximum frequency)/4,000 (O terminal: 12bit 0−10V, O2 terminal: 12bit −10−+10V)														
V/f characteristics			V/f optionally variable (30−400Hz of base frequency), V/f control (constant torque, reduced torque), Sensorless vector control														
Speed fluctuation			±0.5% (sensorless vector control), ±0.2% (with SJ-FB feedback PCB)														
Overload capacity			150% for 60sec., 200% for 0.5sec.														
Acceleration/deceleration time			0.01−3,600sec. (Linear/curve, accel./decel. selection), Two-stage accel./decel.														
Starting Torque			200% at 0.5Hz (Sensorless vector control), 150% at around 0 Hz (Sensorless vector control, 0Hz domain with motor one frame size down)														
Braking	Dynamic braking (Short-time) (*6)		Built-in BRD circuit (optional resistor)								External dynamic braking unit (option)						
	Minimum value of resistor (Ω)		50	50	35	35	35	17	17	17	-	-	-	-	-	-	-
	DC braking		Performs at start ; under set frequency at deceleration, via an external input (braking force, time, and operating frequency).														
Input signal	Frequency setting	Operator	Up and Down keys														
		External signal	DC 0−10V, −10−+10V (input impedance 10kΩ), 4−20mA (input impedance 100Ω)														
		External port	RS-485 interface														
		Potentiometer	Potentiometer (OPE-SRE, OPE-SR)														
	Forward /reverse Start /stop	Operator	Run key/Stop key (change FW/RV by function command)														
		External signal	FW RUN/STOP (NO contact), RV set by terminal assignment (NO/NC selection), 3-wire input available														
		External port	RS-485 interface														
	Intelligent input terminals (Assign eight functions to terminals)		RV(Reverse), CF1-CF4(Multispeed command), JG(Jogging), DB(External DC braking), SET(Second motor constants setting), 2CH(Second accel./decel.), FRS(Free-run stop), EXT(External trip), USP(Unattended start protection), CS(Change to/from commercial power supply), SFT(Software lock), AT(Analog input selection), SET3(Third motor constants setting), RS(Reset), STA(3-wire start), STP(3-wire stop), F/R(3-wire fwd./rev.), PID(PID On/Off), PIDC(PID reset), CAS(Control gain setting), UP/DWN(Remote-controlled accel./decel.) , UDC(Remote-controlled data clearing), OPE(Operator control), SF1-SF7(Multispeed bit command 1−7), OLR(Overload limit change), TL(Torque limit enable), TRQ1,TRQ2(Torque limit selection (1)(2)), PPI(P/PI selection), BOK(Brake verification), ORT(Orientation), LAC(LAD cancel), PCLR(Positioning deviation reset), STAT(90-degree phase difference enable), NO(Not selected)														
	Thermistor input		One terminal (PTC characteristics)														
Output signal	Intelligent output terminals (Assign six functions to five open collector outputs and one relay NO-NC combined contact)		RUN(Run signal), FA1(Frequency arrival signal (at the set frequency)), FA2(Frequency arrival signal (at or above the set frequency)), OL(Overload advance notice signal), OD(Output deviation for PID control), AL(Alarm signal), FA3(Frequency arrival signal (only at the set frequency)), OTQ(Over-torque), IP(Instantaneous power failure signal), UV(Under-voltage signal), TRQ(In torque limit), RNT(RUN time over), ONT(Power-on time over), THM(Thermal alarm), BRK(Brake release), BER(Brake error), ZS(Zero speed), DSE(Speed deviation excessive), POK(Positioning completion), FA4(Frequency arrival signal (at or above the set frequency)(2)), FA5(Frequency arrival signal (only at the set frequency)(2)), OL2(Overload advance notice signal(2)) (Terminal 11−13 or 11−14 are automatically configured as AC0-AC2 or AC0-AC3 per alarm code output selection.)														
	Intelligent monitor output terminals		Analog voltage, analog current, PWM output														
Display monitor			Output frequency, output current, motor torque, scaled value of output frequency, trip history, I/O terminal condition, input power, output voltage														
Other user-settable parameters			V/f free-setting (up to 7 points), frequency upper/lower limit, frequency jump, accel./decel. curve selection, manual torque boost value and frequency adjustment, analog meter tuning, start frequency, carrier frequency, electronic thermal protection level, external frequency output zero/span reference, external frequency input bias start/end, analog input selection, retry after trip, restart after instantaneous power failure, various signal outputs, reduced voltage soft start, overload restriction, default value setting, deceleration and stop after power failure, AVR function, fuzzy accel./decel., auto-tuning(on-line/off-line), high-torque multi-operation														
Carrier frequency range			0.5−15kHz														
Protective functions			Over-current, overload, braking resistor overload, over-voltage, EEPROM error, under-voltage error, CT(Current transformer) error, CPU error, external trip, USP error, ground fault, input over-voltage, instantaneous power failure, expansion card 1 error, expansion card 2 error, inverter thermal trip, phase failure detection, IGBT error, thermistor error														
Environmental conditions	Ambient operating/storage temperature(*7)/ humidity		−10−50℃ / −20−65℃ / 20−90%RH (No condensation)														
	Vibration (*8)		5.9m/s² (0.6G), 10−55Hz											2.94m/s² (0.3G), 10−55Hz			
	Location		Altitude 1,000m or less, indoors (no corrosive gases or dust)														
Color			Gray														
Options	Digital input expansion card		SJ-DG(4digits BCD, 16bits binary)														
	Feedback expansion card		SJ-FB(vector control loop speed sensor)														
	Network interface card		SJ-DN(DeviceNet™), SJ-PBT(PROFIBUS®), SJ-LW(LONWORKS®)														
	Others		EMI filters, input/output reactors, radio noize filters, braking resistors, braking units, LCR filter, communication cables														
Operator			OPE-SRE(4-digit LED with potentiometer(English overlay)) Optional: OPE-S(4-digit LED), OPE-SR(4-digit LED with potentiometer(Japanese/ English overlay)), SRW-0EX(Multilingual (English, French, German, Italian, Spanish, and Portuguese) operator with copy function)														
Weight (lbs.)			3.5(7.7)	3.5(7.7)	3.5(7.7)	3.5(7.7)	3.5(7.7)	3.5(7.7)	5(11)	5(11)	12(26.4)	12(26.4)	12(26.4)	20(44)	30(66)	30(66)	50(110)

*1: Up to 22kW.
An optional conduit box is required for 30kW to 55kW to meet NEMA 1 rating.
*2: The protection method conforms to JEM 1030 / NEMA (U.S.).
*3: The applicable motor refers to Hitachi standard 3-phase motor (4-pole).
To use other motors, be sure to prevent the rated motor current (50Hz) from exceeding the rated output current of the inverter.
*4: The output voltage decreases as the main power supply voltage decreases except for the use of AVR function.
*5: To operate the motor beyond 50/60Hz, please consult with the motor manufacturer about the maximum allowable rotation speed.
*6: Braking resistor is not integrated in the inverter. Please install optional braking resistor or dynamic braking unit when large braking torque is required.
*7: Storage temperature refers to the temperature in transportation.
*8: Conforms to the test method specified in JIS C0040(1999).

Item			400V Class													
Model SJ300-XXX	UL version		007HFU	015HFU	022HFU	040HFU	055HFU	075HFU	110HFU	150HFU	185HFU	220HFU	300HFU	370HFU	450HFU	550HFU
	CE version		007HFE	015HFE	022HFE	040HFE	055HFE	075HFE	110HFE	150HFE	185HFE	220HFE	300HFE	370HFE	450HFE	550HFE
Enclosure (*2)			IP20 (NEMA 1)*1													
Applicable motor (4-pole, kW(HP)) (*3)			0.75(1)	1.5(2)	2.2(3)	4.0(5)	5.5(7.5)	7.5(10)	11(15)	15(20)	18.5(25)	22(30)	30(40)	37(50)	45(60)	55(75)
Rated capacity (kVA)		400V	1.7	2.6	3.6	5.9	8.3	11	15.9	22.1	26.3	33.2	40.1	51.9	62.3	76.2
		480V	2.0	3.1	4.4	7.1	9.9	13.3	19.1	26.6	31.5	39.9	48.2	62.3	74.8	91.4
Rated input voltage			3-phase (3-wire) 380−480V (±10%), 50/60Hz													
Rated input current (A)			2.8	4.2	5.8	9.5	13	18	25	35	42	53	64	83	99	121
Required power supply capacity (kVA)			1.5	3	4.4	8	11	15	22	30	37	44	60	74	90	110
Rated output voltage (*4)			3-phase (3-wire) 380−480V (Corresponding to input voltage)													
Rated output current (continuous) (A)			2.5	3.8	5.3	8.6	12	16	23	32	38	48	58	75	90	110
Control method			Line to line sine wave pulse-width modulation (PWM) control													
Output frequency range (*5)			0.1−400Hz													
Frequency accuracy			Digital: ±0.01% of the maximum frequency, Analog: ±0.2%(25±10℃)													
Frequency resolution			Digital setting: 0.01Hz, Analog setting: (Maximum frequency)/4,000 (O terminal: 12bit 0−10V, O2 terminal: 12bit −10−+10V)													
V/f characteristics			V/f optionally variable (30−400Hz of base frequency), V/f control (constant torque, reduced torque), Sensorless vector control													
Speed fluctuation			±0.5% (sensorless vector control), ±0.2% (with SJ-FB feedback PCB)													
Overload capacity			150% for 60sec., 200% for 0.5sec.													
Acceleration/deceleration time			0.01−3,600sec. (Linear/curve, accel./decel. selection), Two-stage accel./decel.													
Starting Torque			200% at 0.5Hz (Sensorless vector control), 150% at around 0 Hz (Sensorless vector control, 0Hz domain with motor one frame size down)													
Braking	Dynamic braking (Short-time) (*6)		Built-in BRD circuit (optional resistor)							External dynamic braking unit (option)						
	Minimum value of resistor (Ω)		100	100	100	100	100	50	50	-	-	-	-	-	-	-
	DC braking		Performs at start ; under set frequency at deceleration, or via an external input (braking force, time, and operating frequency).													
Input signal	Frequency setting	Operator	Up and Down keys													
		External signal	DC 0−10V, −10−+10V (input impedance 10kΩ), 4−20mA (input impedance 100Ω)													
		External port	RS-485 interface													
		Potentiometer	Potentiometer (OPE-SRE, OPE-SR)													
	Forward/reverse Start /stop	Operator	Run key/Stop key (change FW/RV by function command)													
		External signal	FW RUN/STOP (NO contact), RV set by terminal assignment (NO/NC selection), 3-wire input available													
		External port	RS-485 interface													
	Intelligent input terminals (Assign eight functions to terminals)		RV(Reverse), CF1-CF4(Multispeed command), JG(Jogging), DB(External DC braking), SET(Second motor constants setting), 2CH(Second accel./decel.), FRS(Free-run stop), EXT(External trip), USP(Unattended start protection), CS(Change to/from commercial power supply), SFT(Software lock), AT(Analog input selection), SET3(Third motor constants setting), RS(Reset), STA(3-wire start), STP(3-wire stop), F/R(3-wire fwd./rev.),PID(PID On/Off), PIDC(PID reset), CAS(Control gain setting), UP/DWN(Remote-controlled accel./decel.) , UDC(Remote-controlled data clearing), OPE(Operator control), SF1-SF7(Multispeed bit command 1−7), OLR(Overload limit change), TL(Torque limit enable), TRQ1,TRQ2(Torque limit selection (1)(2)), PPI(P/PI selection), BOK(Brake verification), ORT(Orientation), LAC(LAD cancel), PCLR(Positioning deviation reset), STAT(90-degree phase difference enable), NO(Not selected)													
	Thermistor input		One terminal (PTC characteristics)													
Output signal	Intelligent output terminals (Assign six functions to five open collector outputs and one relay NO-NC combined contact)		RUN(Run signal), FA1(Frequency arrival signal (at the set frequency)), FA2(Frequency arrival signal (at or above the set frequency)), OL(Overload advance notice signal), OD(Output deviation for PID control), AL(Alarm signal), FA3(Frequency arrival signal (only at the set frequency)), OTQ(Over-torque), IP(Instantaneous power failure signal), UV(Under-voltage signal), TRQ(In torque limit), RNT(RUN time over), ONT(Power-on time over), THM(Thermal alarm), BRK(Brake release), BER(Brake error), ZS(Zero speed), DSE(Speed deviation excessive), POK(Positioning completion), FA4(Frequency arrival signal (at or above the set frequency)(2)), FA5(Frequency arrival signal (only at the set frequency)(2)), OL2(Overload advance notice signal(2))(Terminal 11−13 or 11−14 are automatically configured as AC0-AC2 or AC0-AC3 per alarm code output selection.)													
	Intelligent monitor output terminals		Analog voltage, analog current, PWM output													
Display monitor			Output frequency, output current, motor torque, scaled value of output frequency, trip history, I/O terminal condition, input power, output voltage													
Other user-settable parameters			V/f free-setting (up to 7 points), frequency upper/lower limit, frequency jump, accel./decel. curve selection, manual torque boost value and frequency adjustment, analog meter tuning, start frequency, carrier frequency, electronic thermal protection level, external frequency output zero/span reference, external frequency input bias start/end, analog input selection, retry after trip, restart after instantaneous power failure, various signal outputs, reduced voltage soft start, overload restriction, default value setting, deceleration and stop after power failure, AVR function, fuzzy accel./decel., auto-tuning(on-line/off-line), high-torque multi-operation													
Carrier frequency range			0.5−15kHz													
Protective functions			Over-current, overload, braking resistor overload, over-voltage, EEPROM error, under-voltage error, CT(Current transformer) error, CPU error, external trip, USP error, ground fault, input over-voltage, instantaneous power failure, expansion card 1 error, expansion card 2 error, inverter thermal trip, phase failure detection, IGBT error, thermistor error													
Environmental conditions	Ambient operating/storage temperature(*7)/humidity		−10−50℃ / −20−65℃ / 20−90%RH (No condensation)													
	Vibration (*8)		5.9m/s² (0.6G), 10−55Hz										2.94m/s² (0.3G), 10−55Hz			
	Location		Altitude 1,000m or less, indoors (no corrosive gases or dust)													
Color			Gray													
Options	Feedback PCB		SJ-FB(vector control loop speed sensor)													
	Digital input PCB		SJ-DG (4-digit BCD, 16-bit binary)													
	Others		EMI filters, input/output reactors, DC reactors, radio noise filters, braking resistors, braking units, LCR filter, communication cables, Network interface cards													
Operator			OPE-S(4-digit LED)/OPE-SRE(4-digit LED with potentiometer(English overlay)) Optional: OPE-SR(4-digit LED with potentiometer(Japanese/English overlay)), SRW-0EX(Multilingual (English, French, German, Italian, Spanish, and Portuguese) operator with copy function)													
Weight (lbs.)			3.5(7.7)	3.5(7.7)	3.5(7.7)	3.5(7.7)	3.5(7.7)	5(11)	5(11)	12(26.4)	12(26.4)	12(26.4)	20(44)	30(66)	30(66)	30(66)

*1: Up to 22kW.
An optional conduit box is required for 30kW to 55kW to meet NEMA 1 rating.
*2: The protection method conforms to JEM 1030 / NEMA (U.S.).
*3: The applicable motor refers to Hitachi standard 3-phase motor (4-pole).
To use other motors, be sure to prevent the rated motor current (50Hz) from exceeding the rated output current of the inverter.
*4: The output voltage decreases as the main power supply voltage decreases except for the use of AVR function.
*5: To operate the motor beyond 50/60Hz, please consult with the motor manufacturer about the maximum allowable rotation speed.
*6: Braking resistor is not integrated in the inverter. Please install optional braking resistor or dynamic braking unit when large braking torque is required.
*7: Storage temperature refers to the temperature in transportation.
*8: Conforms to the test method specified in JIS C0040(1999).

Item			400V Class					
Model SJ300-XXX	UL version		750HFU	900HFU	1100HFU	−	1500HFU	4000HFU
	CE version		750HFE	900HFE	1100HFE	1320HFE	−	4000HFE
Enclosure (*1)			IP00					
Applicable motor (4-pole, kW(HP)) (*2)			75 (100)	90 (125)	110 (150)	132 (175)	150 (200)	400 (530)
Rated capacity (kVA)		400V	103.2	121.9	150.3	180.1	180.1	554.3
		480V	123.8	146.3	180.4	216.1	216.1	665.1
Rated input voltage			3-phase (3-wire) 380-480V (±10%), 50/60Hz					3-phase (3-wire) 380-480V (+10%,-15%), 50/60Hz
Rated input current (A)			164	194	239	286	286	880
Required power supply capacity (kVA)			150	180	220	264	300	620
Rated output voltage (*3)			3-phase (3-wire) 380−480V (Corresponding to input voltage)					
Rated output current (continuous) (A)			149	176	217	260	260	800
Control method			Line to line sine wave pulse-width modulation (PWM) control					
Output frequency range (*4)			0.1−400Hz					
Frequency accuracy			Digital: ±0.01% of the maximum frequency, Analog: ±0.2%(25±10℃)					
Frequency resolution			Digital setting: 0.01Hz, Analog setting: (Maximum frequency)/4,000 (O terminal: 12bit 0−10V, O2 terminal: 12bit −10−+10V)					
V/f characteristics			V/f optionally variable (30-400Hz of base frequency), V/f control (constant torque, reduced torque), Sensorless vector control					V/f optionally variable (30-400Hz of base frequency), V/f control (constant torque, reduced torque)
Speed fluctuation			±0.5% (sensorless vector control), ±0.2% (with SJ-FB feedback PCB)					−
Overload capacity			150% for 60sec., 180% for 0.5sec.					
Acceleration/deceleration time			0.01−3,600sec. (Linear/curve, accel./decel. selection)					
Starting Torque			180% at 0.5Hz (Sensorless vector control), 130% at around 0 Hz (Sensorless vector control, 0Hz domain, with motor one frame size down)					70−100%(V/f control)
Braking	Dynamic braking (Short-time) (*5)		External dynamic braking unit (option)					
	DC braking		Performs at start ; under set frequency at deceleration, or via an external input (braking force, time, and operating frequency)					
Input signal	Frequency setting	Operator	Up and Down keys					
		External signal	DC 0−10V, −10−+10V (input impedance 10kΩ), 4−20mA (input impedance 100Ω)					
		External port	RS-485 interface					
		Potentiometer	Potentiometer (OPE-SRE, OPE-SR)					
	Forward/reverse Start /stop	Operator	Run key/Stop key (change FW/RV by function command)					
		External signal	FW RUN/STOP (NO contact), RV set by terminal assignment (NO/NC selection), 3-wire input available					
		External port	RS-485 interface					
	Intelligent input terminals (Assign eight functions to terminals)		RV(Reverse), CF1-CF4(Multispeed command), JG(Jogging), DB(External DC braking), SET(Second motor constants setting), 2CH(Second accel./decel.), FRS(Free-run stop), EXT(External trip), USP(Unattended start protection), CS(Change to/from commercial power supply), SFT(Software lock), AT(Analog input selection), SET3(Third motor constants setting), RS(Reset), STA(3-wire start), STP(3-wire stop), F/R(3-wire fwd./rev.),PID(PID On/Off), PIDC(PID reset), CAS(Control gain setting), UP/DWN(Remote-controlled accel./decel.) UDC(Remote-controlled data clearing), OPE(Operator control), SF1-SF7(Multispeed bit command 1−7), OLR(Overload limit change), TL(Torque limit enable), TRQ1,TRQ2(Torque limit selection (1)(2)), PPI(P/PI selection), BOK(Brake verification), ORT(Orientation), LAC(LAD cancel), PCLR(Positioning deviation reset), STAT(90-degree phase difference enable), NO(Not selected)					
	Thermistor input		One terminal (PTC characteristics)					
Output signal	Intelligent output terminals (Assign six functions to five open collector outputs and one relay NO-NC combined contact)		RUN(Run signal), FA1(Frequency arrival signal (at the set frequency)), FA2(Frequency arrival signal (at or above the set frequency)), OL(Overload advance notice signal), OD(Output deviation for PID control), AL(Alarm signal), FA3(Frequency arrival signal (only at the set frequency)), OTQ(Over-torque), IP(Instantaneous power failure signal), UV(Under-voltage signal), TRQ(In torque limit), RNT(RUN time over), ONT(Power-on time over), THM(Thermal alarm), BRK(Brake release), BER(Brake error), ZS(Zero speed), DSE(Speed deviation excessive), POK(Positioning completion), FA4(Frequency arrival signal (at or above the set frequency)(2)), FA5(Frequency arrival signal (only at the set frequency)(2)), OL2(Overload advance notice signal(2))(Terminal 11−13 or 11−14 are automatically configured as AC0-AC2 or AC0-AC3 per alarm code output selection.)					
	Intelligent monitor output terminals		Analog voltage, analog current, PWM output					
Display monitor			Output frequency, output current, motor torque, scaled value of output frequency, trip history, I/O terminal condition, input power, output voltage					
Other user-settable parameters			V/f free-setting (up to 7 points), frequency upper/lower limit, frequency jump, accel./decel. curve selection, manual torque boost value and frequency adjustment, analog meter tuning, start frequency, carrier frequency, electronic thermal protection level, external frequency output zero/span reference, external frequency input bias start/end, analog input selection, retry after trip, restart after instantaneous power failure, various signal outputs, reduced voltage soft start, overload restriction, default value setting, deceleration and stop after power failure, AVR function, fuzzy accel./decel., auto-tuning(on-line/off-line), high-torque multi-operation					
Carrier frequency range			0.5−10kHz					0.5−3kHz
Protective functions			Over-current, overload, braking resistor overload, over-voltage, EEPROM error, under-voltage error, CT(Current transformer) error, CPU error, external trip, USP error, ground fault, input over-voltage, instantaneous power failure, expansion card 1 error, expansion card 2 error, inverter thermal trip, phase failure detection, IGBT error, thermistor error					
Environmental conditions	Ambient operating/storage temperature(*6)/humidity		−10−50℃ / −20−65℃ / 20−90%RH (No condensation)					
	Vibration (*7)		2.94m/s^2 (0.3G), 10−55Hz					
	Location		Altitude 1,000m or less, indoors (no corrosive gases or dust)					
Color			Gray					
Options	Feedback PCB		SJ-FB(vector control loop speed sensor)					−
	Digital input PCB		SJ-DG (4-digit BCD, 16-bit binary)					
	Others		EMI filters, input/output reactors, DC reactors, radio noise filters, braking resistors, braking units, LCR filter, communication cables, Network interface cards					
Operator			OPE-S(4-digit LED)/OPE-SRE(4-digit LED with potentiometer(English overlay)) Optional: OPE-SR(4-digit LED with potentiometer(Japanese/English overlay)), SRW-0EX(Multilingual (English, French, German, Italian, Spanish, and Portuguese) operator with copy function)					
Weight (lbs.)			60 (132)	60 (132)	80 (176)	80 (176)	80 (176)	360 (792)

*1: The protection method conforms to JEM 1030 / NEMA (U.S.).
*2: The applicable motor refers to Hitachi standard 3-phase motor (4-pole).
To use other motors, be sure to prevent the rated motor current (50Hz) from exceeding the rated output current of the inverter.
*3: The output voltage decreases as the main power supply voltage decreases except for the use of AVR function.
*4: To operate the motor beyond 50/60Hz, please consult with the motor manufacturer about the maximum allowable rotation speed.
*5: Braking resistor is not integrated in the inverter. Please an optional dynamic braking unit when large braking torque is required.
*6: Storage temperature refers to the temperature in transportation.
*7: Conforms to the test method specified in JIS C0040(1999).
*8: Please be sure to connect DC reactor attached to 4000HF.

DIMENSIONS

●SJ300-004LFU, 007−055LFU/ HFE, HFU

[Unit:mm (inch)]
Inches for reference only

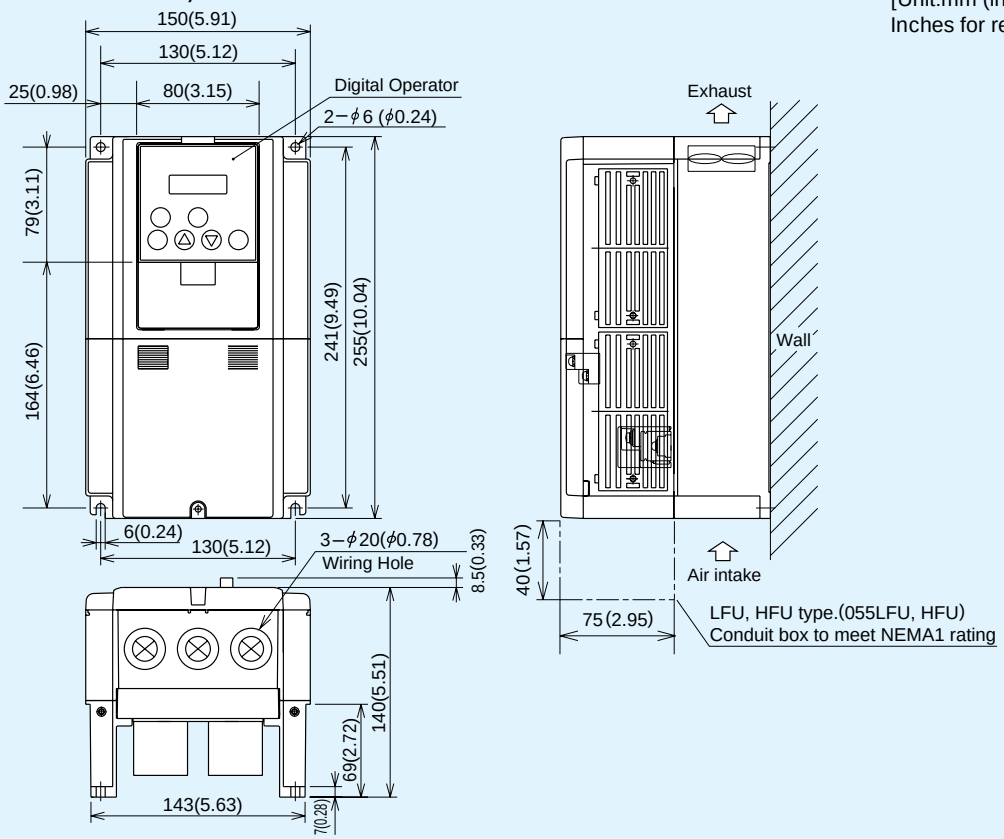

●SJ300-075, 110LFU/ HFE, HFU

[Unit:mm (inch)]
Inches for reference only

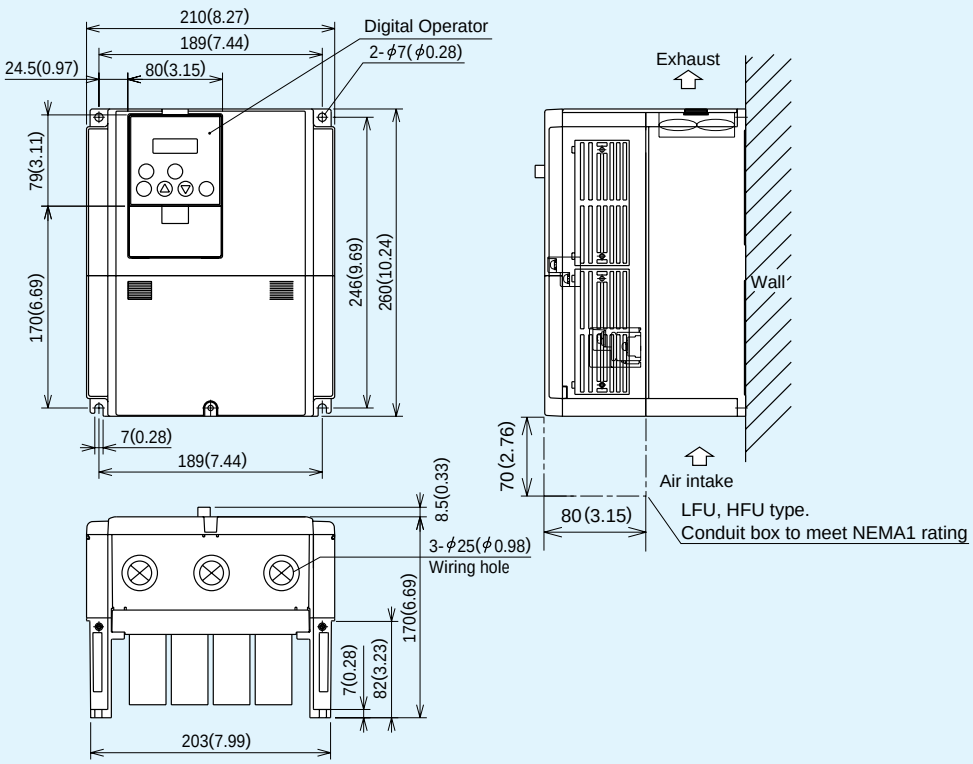

● SJ300-150−220LFU/ HFE, HFU

[Unit:mm (inch)]
Inches for reference only

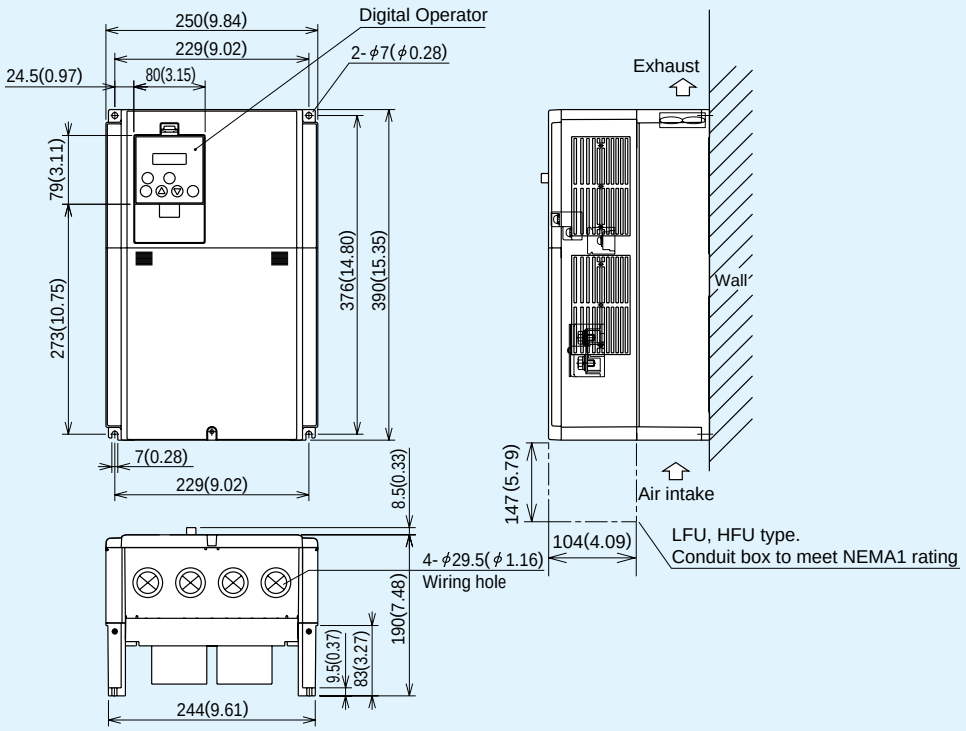

● SJ300-300LFU/ HFE, HFU

[Unit:mm (inch)]
Inches for reference only

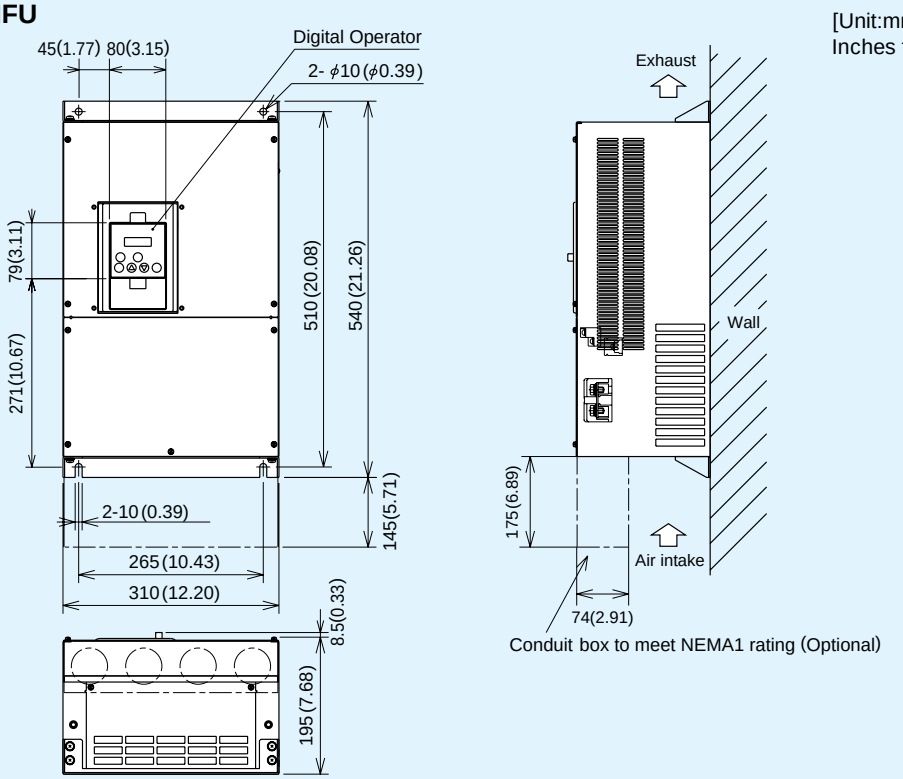

●SJ300-370−450LFU, 370−550HFE, HFU

[Unit:mm (inch)]
Inches for reference only

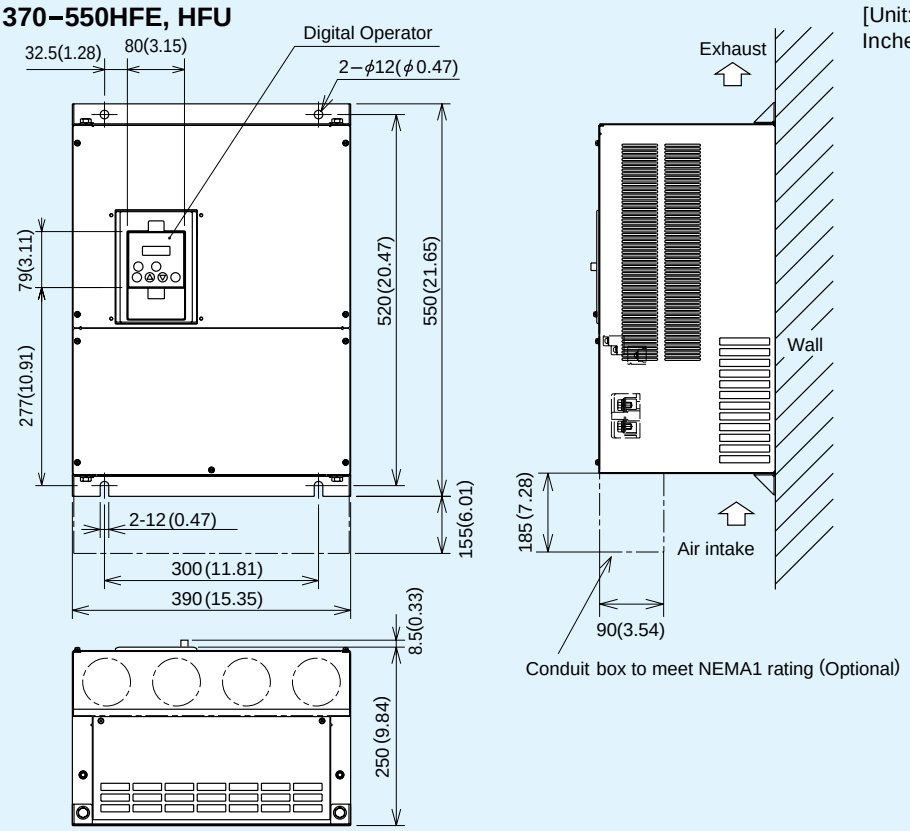

●SJ300-550LFU

[Unit:mm (inch)]
Inches for reference only

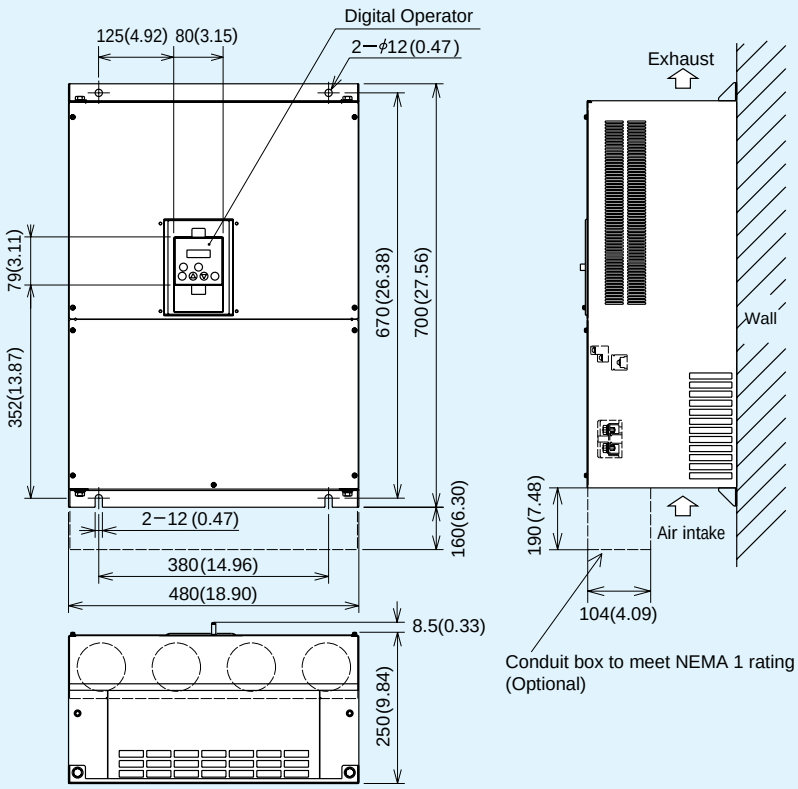

●SJ300-750, 900HFE, HFU

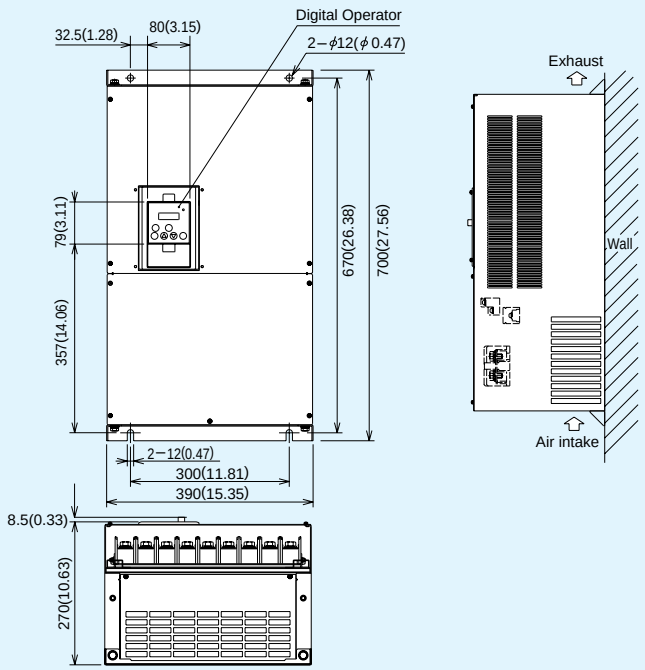

[Unit:mm (inch)]
Inches for reference only

●SJ300-1100HFE, HFU 1320HFE 1500HFU

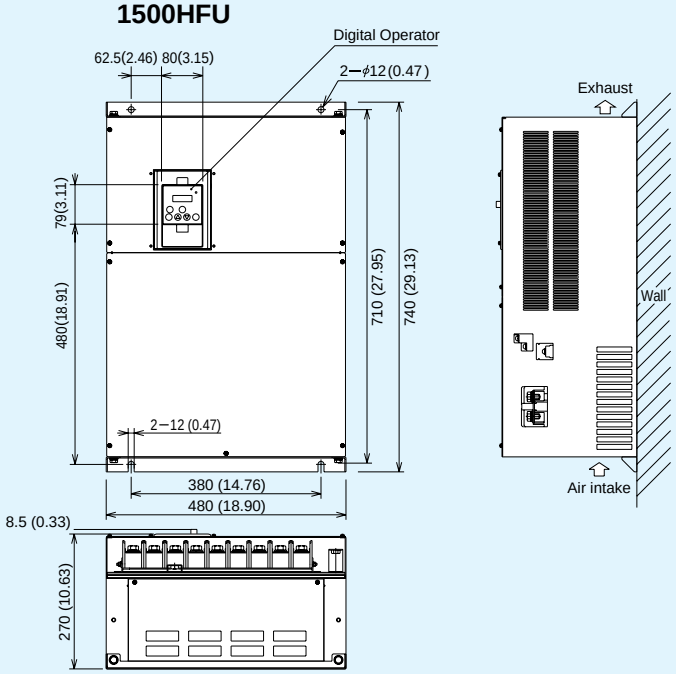

[Unit:mm (inch)]
Inches for reference only

●SJ300-4000HF

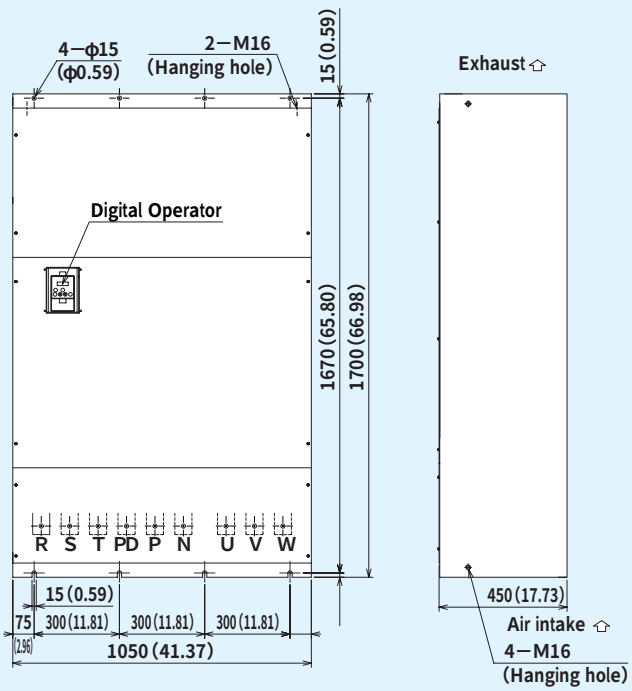

●Attachment DC reactor

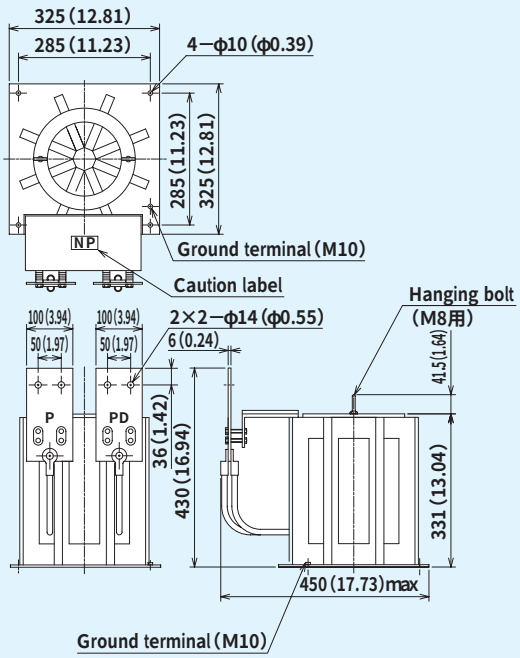

OPERATION and PROGRAMMING

SJ300 Series can be easily operated with the digital operator (OPE-S) provided as standard. The digital operator can also be detached and can be used for remote-control. Multilingual (English, French, German, Italian , Spanish and Portuguese) operator with copy function (SRW-0EX) and digital operator with potentiometer (OPE-SR) are also available as options. (For US version, OPE-SRE (English overlay with potentiometer) is provided as standard.)

Parameter Display
Displays frequency, motor current, rotational speed of the motor, and an alarm code.

Monitor LEDs
Shows drive status.

RUN Key
Press to run the motor.

STOP/RESET Key
Press to stop the drive or reset an alarm.

Function Key
Press to set or monitor a parameter value.

Power LED
Lights when the power input to the drive is ON.

Display Unit LEDs
Indicates the unit associated with the parameter display.

Store Key
Press to write the new value to the EEPROM.

Up/Down Keys
Press up or down to sequence through parameters and functions shown on the display, and increment/decrement values.

1.Setting the maximum output frequency

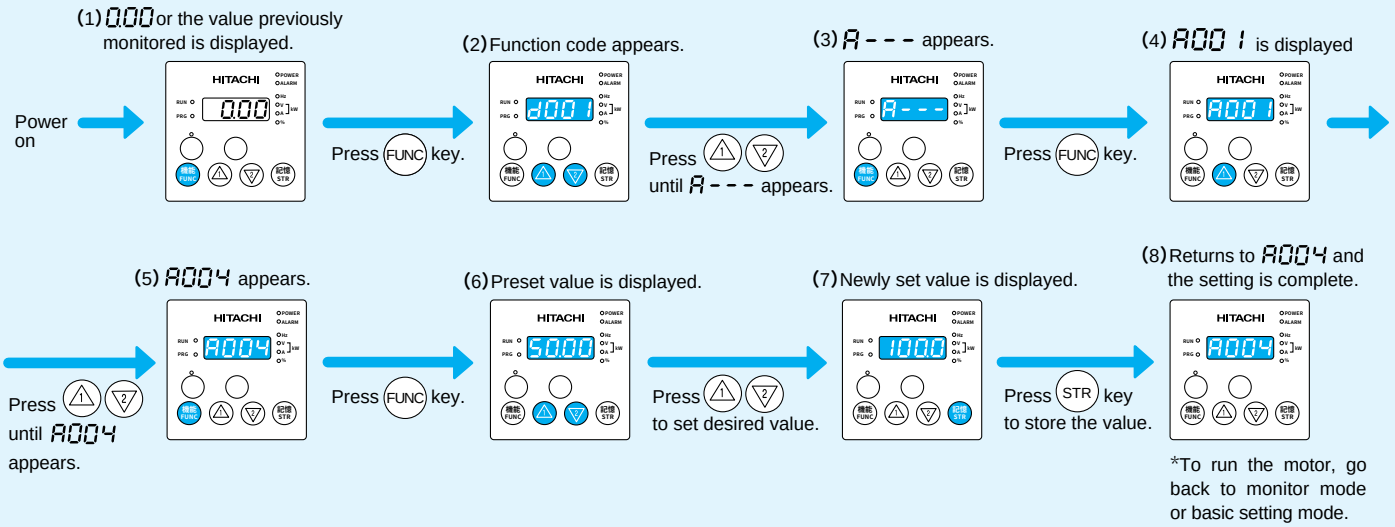

2.Monitoring output current value

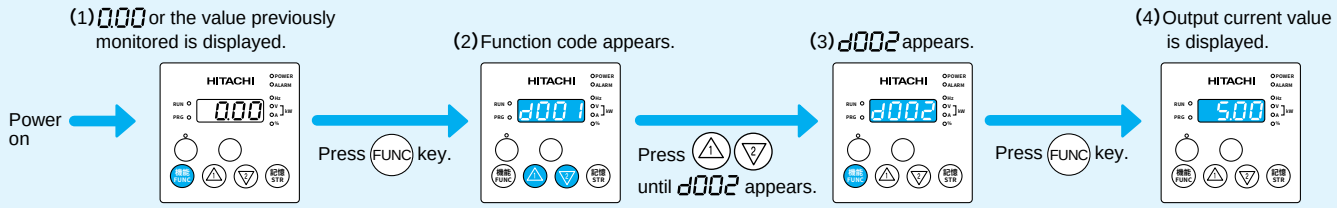

FUNCTION LIST

●MONITORING FUNCTIONS and MAIN PROFILE PARAMETERS

[○ = Allowed
× = Not permitted]

	Code	Name	Description	Default Setting -FE(CE)	Default Setting -FU(UL)	Run-time Setting	Run-time Data Edit (Enabled at b031)
Monitor Mode	d001	Output frequency monitor	0.00−99.99/100.0−400.0Hz	-	-	-	-
	d002	Output current monitor	0.0−999.9A	-	-	-	-
	d003	Motor rotational direction monitor	F(Forward) / o(Stop) / r(Reverse)	-	-	-	-
	d004	Process variable (PV), PID feedback monitor	0.00−99.99/100.0−999.9/1000.−9999./1000−9999/「100−「999(10,000-99,900)	-	-	-	-
	d005	Intelligent input terminal status	FW; 8 7 6 5 4 3 2 1; ON / OFF (Example) FW, 7, 2, 1 : ON; 8, 6, 5, 4, 3 : OFF	-	-	-	-
	d006	Intelligent output terminal status	AL 15 14 13 12 11; ON / OFF (Example) 12, 11 : ON; AL, 15, 14, 13 :OFF	-	-	-	-
	d007	Scaled output frequency monitor	0.00−99.99/100.0−999.9/1000.−9999./1000−3996(10,000−39,960)	-	-	-	-
	d012	Torque monitor	−300.−+300.%	-	-	-	-
	d013	Output voltage monitor	0.0−600.0V	-	-	-	-
	d014	Power monitor	0.0−999.9kW	-	-	-	-
	d016	Cumulative RUN time monitor	0.−9999./1000−9999/「100−「999(10,000−99,900)hr	-	-	-	-
	d017	Cumulative power-on time monitor	0.−9999./1000−9999/「100−「999(10,000−99,900)hr	-	-	-	-
	d080	Trip count monitor	0.−9999./1000−6553(10,000−65,530)	-	-	-	-
	d081 ~ d086	Trip monitor 1−6	Displays trip event information	-	-	-	-
	d090	Warning monitor	Warning code	-	-	-	-
Setting Mode	F001	Output frequency setting	0.0, Starting frequency to maximum frequency (maximum frequency for second and third motor)	0.00Hz	0.00Hz	○	○
	F002	Acceleration time (1) setting	0.01−99.99/100.0−999.9/1000.−3600. sec.	30.00s	30.00s	○	○
	F202	Acceleration time (1) setting for second motor	0.01−99.99/100.0−999.9/1000.−3600. sec.	30.00s	30.00s	○	○
	F302	Acceleration time (1) setting for third motor	0.01−99.99/100.0−999.9/1000.−3600. sec.	30.00s	30.00s	○	○
	F003	Deceleration time (1) setting	0.01−99.99/100.0−999.9/1000.−3600. sec.	30.00s	30.00s	○	○
	F203	Deceleration time (1) setting for second motor	0.01−99.99/100.0−999.9/1000.−3600. sec.	30.00s	30.00s	○	○
	F303	Deceleration time (1) setting for third motor	0.01−99.99/100.0−999.9/1000.−3600. sec.	30.00s	30.00s	○	○
	F004	Motor rotational direction setting	00(Forward)/01(Reverse)	00	00	×	×
Expanded Function	A---	A Group: Standard functions					
	b---	b Group: Fine tuning functions					
	C---	C Group: Intelligent terminal functions					
	H---	H Group: Motor constants functions					
	P---	P Group: Expansion card functions					
	U---	U Group: User-selectable menu functions					

●A GROUP: STANDARD FUNCTIONS

[○ = Allowed
× = Not permitted]

	Code	Name	Description	Default Setting -FE(CE)	Default Setting -FU(UL)	Run-time Setting	Run-time Data Edit (Enabled at b031)
Basic Setting	A001	Frequency source setting	00(Potentiometer) / 01(Terminals) / 02(Operator) / 03(RS485)/ 04(Expansion card 1) / 05(Expansion card 2)	01	01	×	×
	A002	Run command source setting	01(Terminals) / 02(Operator) / 03(RS-485) / 04(Expansion card 1) / 05(Expansion card 2)	01	01	×	×
	A003	Base frequency setting	30.Hz-Maximum frequency	50.	60.	×	×
	A203	Base frequency setting for second motor	30.Hz-Maximum frequency for second motor	50.	60.	×	×
	A303	Base frequency setting for third motor	30.Hz-Maximum frequency for third motor	50.	60.	×	×
	A004	Maximum frequency setting	30.−400.Hz	50.	60.	×	×
	A204	Maximum frequency setting for second motor	30.−400.Hz	50.	60.	×	×
	A304	Maximum frequency setting for third motor	30.−400.Hz	50.	60.	×	×
Analog Input Setting	A005	AT selection	00(Selection between O and OI at AT) / 01(Selection between O and O2 at AT)	00	00	×	×
	A006	O2 selection	00(Independent)/ 01(Only positive) / 02(Both positive and negative)/ 03(Disable)	03	03	×	×
	A011	O-L input active range start frequency	0.00−400.0Hz	0.00	0.00	×	○
	A012	O-L input active range end frequency	0.00−400.0Hz	0.00	0.00	×	○
	A013	O-L input active range start voltage	0.−100.%	0.	0.	×	○
	A014	O-L input active range end voltage	0.−100.%	100.	100.	×	○
	A015	O-L input start frequency enable	00(External frequency output zero reference)/ 01(0Hz)	01	01	×	○
	A016	External frequency filter time constant	1.−30.(Sampling time=2msec.)	8.	8.	×	○
Multispeed and Jogging Frequency Setting	A019	Multispeed operation selection	00(Binary: up to 16-stage speed at 4 terminals) / 01(Bit: up to 8-stage speed at 7 terminals)	00	00	×	×
	A020	Multispeed frequency setting (0)	0.0, Starting frequency to maximum frequency	0.00	0.00	○	○
	A220	Multispeed frequency setting (0) for second motor	0.0, Starting frequency to maximum frequency for second motor	0.00	0.00	○	○
	A320	Multispeed frequency setting (0) for third motor	0.0, Starting frequency to maximum frequency for third motor	0.00	0.00	○	○
	A021 ~ A035	Multispeed frequency setting (1-15)	0.0, Starting frequency to maximum frequency	0.00	0.00	○	○
	A038	Jog frequency setting	0.0, Starting frequency to 9.99Hz	1.00	1.00	○	○
	A039	Jog stop mode	00(Free-run stop/disable during RUN)/ 01(Deceleration to stop/disable during RUN)/ 02(DC braking to stop/disable during RUN)/ 03(Free-run stop/enable during RUN)/ 04(Deceleration to stop/enable during RUN)/ 05(DC braking to stop/enable during RUN)	00	00	×	○

[○ = Allowed
× = Not permitted]

	Code	Name	Description	Default Setting -FE(CE)	Default Setting -FU(UL)	Run-time Setting	Run-time Data Edit (Enabled at b031)
V/f Characteristic	A041	Torque boost method selection	00(Manual torque boost) / 01(Automatic torque boost)	00	00	×	×
	A241	Torque boost method selection for second motor	00(Manual torque boost) / 01(Automatic torque boost)	00	00	×	×
	A042	Manual torque boost value	0.0−20.0%	1.0	1.0	○	○
	A242	Manual torque boost value for second motor	0.0−20.0%	1.0	1.0	○	○
	A342	Manual torque boost value for third motor	0.0−20.0%	1.0	1.0	○	○
	A043	Manual torque boost frequency adjustment	0.0−50.0%	5.0	5.0	○	○
	A243	Manual torque boost frequency adjustment for second motor	0.0−50.0%	5.0	5.0	○	○
	A343	Manual torque boost frequency adjustment for third motor	0.0−50.0%	5.0	5.0	○	○
	A044	V/f characteristic curve selection	00(VC)/ 01(VP 1.7th power)/ 02(V/f free-setting)/ 03(SLV) / 04(SLV at around 0Hz)/ 05(Vector control with encoder feedback)	00	00	×	×
	A244	V/f characteristic curve selection for second motor	00(VC)/ 01(VP 1.7th power)/ 02(V/f free-setting)/ 03(SLV)/ 04(SLV at around 0Hz)	00	00	×	×
	A344	V/f characteristic curve selection for third motor	00(VC) / 01(VP 1.7th power)	00	00	×	×
	A045	V/f gain setting	20.−100.	100.	100.	○	○
DC Braking	A051	DC braking enable	00(Disable) / 01(Enable)	00	00	×	○
	A052	DC braking frequency setting	0.00−60.00Hz	0.50	0.50	×	○
	A053	DC braking wait time	0.0−5.0sec.	0.0	0.0	×	○
	A054	DC braking force setting	0.−100.% [0.−80.(%)]	0.	0.	×	○
	A055	DC braking time setting	0.0−60.0sec.	0.0	0.0	×	○
	A056	DC braking edge or level detection	00(Edge) / 01(Level)	01	01	×	○
	A057	DC braking force setting at the starting point	0.−100.% [0.−80.(%)]	0.	0.	×	○
	A058	DC braking time setting at the starting point	0.0−60.0sec.	0.0	0.0	×	○
	A059	DC braking carrier frequency setting	0.5−15kHz (To be derated) [0.5−10kHz]	5.0[3.0]	5.0[3.0]	×	×
Frequency Upper/Lower Limit and Jump Frequency	A061	Frequency upper limit setting	0.00, Starting frequency to maximum frequency	0.00	0.00	×	○
	A261	Frequency upper limit setting for second motor	0.00, Starting frequency to maximum frequency for second motor	0.00	0.00	×	○
	A062	Frequency lower limit setting	0.00, Starting frequency to maximum frequency	0.00	0.00	×	○
	A262	Frequency lower limit setting for second motor	0.00, Starting frequency to maximum frequency for second motor	0.00	0.00	×	○
	A063	Jump frequency (1) setting	0.00−99.99 / 100.0−400.0Hz	0.00	0.00	×	○
	A064	Jump frequency width (1) setting	0.00−10.00Hz	0.50	0.50	×	○
	A065	Jump frequency (2) setting	0.00−99.99 / 100.0−400.0Hz	0.00	0.00	×	○
	A066	Jump frequency width (2) setting	0.00−10.00Hz	0.50	0.50	×	○
	A067	Jump frequency (3) setting	0.00−99.99 / 100.0−400.0Hz	0.00	0.00	×	○
	A068	Jump frequency width (3) setting	0.00−10.00Hz	0.50	0.50	×	○
	A069	Acceleration stop frequency setting	0.00−99.99 / 100.0−400.0Hz	0.00	0.00	×	○
	A070	Acceleration stop time setting	0.0−60.0sec.	0.0	0.0	×	○
PID Control	A071	PID function enable	00(Disable) / 01(Enable)	00	00	×	○
	A072	PID proportional constant	0.2−5.0	1.0	1.0	○	○
	A073	PID integral time constant	0.0−3600.sec.	1.0	1.0	○	○
	A074	PID derivative time constant	0.0−100.0sec.	0.0	0.0	○	○
	A075	Process variable scale conversion	0.01−99.99%	1.00	1.00	×	○
	A076	Process variable source setting	00(at OI) / 01(at O)	00	00	×	○
AVR Function	A081	AVR function selection	00(Always ON) / 01(Always OFF) / 02(OFF during deceleration)	00	00	×	×
	A082	AVR voltage selection	200/215/220/230/240, 380/400/415/440/460/480V	230/400	230/460	×	×
Operation Mode and Accel./ Decel. Function	A085	Operation mode selection	00(Normal operation)/ 01(Energy-saving operation) / 02(Fuzzy operation)	00	00	×	×
	A086	Energy saving mode tuning	0.0−100.0	50.0	50.0	○	○
	A092	Acceleration time (2)	0.01−99.99 / 100.0−999.9 / 1000.−3600.sec.	15.00	15.00	○	○
	A292	Acceleration time (2) for second motor	0.01−99.99 / 100.0−999.9 / 1000.−3600.sec.	15.00	15.00	○	○
	A392	Acceleration time (2) for third motor	0.01−99.99 / 100.0−999.9 / 1000.−3600.sec.	15.00	15.00	○	○
	A093	Deceleration time (2)	0.01−99.99 / 100.0−999.9 / 1000.−3600.sec.	15.00	15.00	○	○
	A293	Deceleration time (2) for second motor	0.01−99.99 / 100.0−999.9 / 1000.−3600.sec.	15.00	15.00	○	○
	A393	Deceleration time (2) for third motor	0.01−99.99 / 100.0−999.9 / 1000.−3600.sec.	15.00	15.00	○	○
	A094	Select method to switch to second accel./decel. profile	00(2CH input from terminal) / 01(Transition frequency)	00	00	×	×
	A294	Select method to switch to second accel./decel. profile for second motor	00(2CH input from terminal) / 01(Transition frequency)	00	00	×	×
	A095	Accel(1) to Accel(2) frequency transition point	0.00−99.99 / 100.0−400.0Hz	0.00	0.00	×	×
	A295	Accel(1) to Accel(2) frequency transition point for second motor	0.00−99.99 / 100.0−400.0Hz	0.00	0.00	×	×
	A096	Decel(1) to Decel(2) frequency transition point	0.00−99.99 / 100.0−400.0Hz	0.00	0.00	×	×
	A296	Decel(1) to Decel(2) frequency transition point for second motor	0.00−99.99 / 100.0−400.0Hz	0.00	0.00	×	×
	A097	Acceleration curve selection	00(Linear) / 01(S-curve) / 02(U-shape) / 03(Reverse U-shape)	00	00	×	×
	A098	Deceleration curve selection	00(Linear) / 01(S-curve) / 02(U-shape) / 03(Reverse U-shape)	00	00	×	×
External Frequency Tuning	A101	OI-L input active range start frequency	0.00−99.99 / 100.0−400.0Hz	0.00	0.00	×	×
	A102	OI-L input active range end frequency	0.00−99.99 / 100.0−400.0Hz	0.00	0.00	×	○
	A103	OI-L input active range start current	0.−100.%	20.	20.	×	○
	A104	OI-L input active range end current	0.−100.%	100.	100.	×	○
	A105	OI-L input start frequency enable	00(External frequency output zero reference) / 01(0Hz)	01	01	×	○
	A111	O2-L input active range start frequency	−400.−400.Hz	0.00	0.00	×	○
	A112	O2-L input active range end frequency	−400.−400.Hz	0.00	0.00	×	○
	A113	O2-L input active range start voltage	−100.−100.%	-100.	-100.	×	○
	A114	O2-L input active range end voltage	−100.−100.%	100.	100.	×	○
Accel./ Decel.Curve	A131	Acceleration curve constants setting	01(Smallest deviation)−10(Largest deviation)	02	02	×	○
	A132	Deceleration curve constants setting	01(Smallest deviation)−10(Largest deviation)	02	02	×	○

Note:[ ]75kW and over

●B GROUP: FINE TUNING FUNCTIONS

[○= Allowed
×= Not permitted]

	Code	Name	Description	Default Setting -FE(CE)	Default Setting -FU(UL)	Run-time Setting	Run-time Data Edit (Enabled at b031)
Restart after Instantaneous Power Failure	b001	Selection of automatic restart mode	00(Alarm output after trip, automatic restart disable) / 01(Restart at 0Hz) / 02(Resume operation after frequency matching)/ 03(Resume previous frequency after frequency matching, then decelerate to stop and display trip information)	00	00	×	○
	b002	Allowable instantaneous power failure time	0.3−25.0sec.	1.0	1.0	×	○
	b003	Time delay enforced before motor restart	0.3−100.0sec.	1.0	1.0	×	○
	b004	Instantaneous power failure and under-voltage trip enable	00(Disable) / 01(Enable) / 02(Disable during stop and deceleration to stop)	00	00	×	○
	b005	Number of restarts after instantaneous power failure and under-voltage trip events	00(16 times) / 01(Always restart)	00	00	×	○
	b006	Phase loss detection enable	00(Disable) / 01(Enable)	00	00	×	○
	b007	Restart frequency threshold	0.00−99.99/100.0−400.0Hz	0.00	0.00	×	○
Electronic Thermal	b012	Level of electronic thermal setting	0.20×rated current-1.20×rated current	Rated current	Rated current	×	○
	b212	Level of electronic thermal setting for second motor	0.20×rated current-1.20×rated current	Rated current	Rated current	×	○
	b312	Level of electronic thermal setting for third motor	0.20×rated current-1.20×rated current	Rated current	Rated current	×	○
	b013	Electronic thermal characteristics	00(Reduced torque) / 01(Constant torque) / 02(V/f free-setting)	01	01	×	○
	b213	Electronic thermal characteristics for second motor	00(Reduced torque) / 01(Constant torque) / 02(V/f free-setting)	01	01	×	○
	b313	Electronic thermal characteristics for third motor	00(Reduced torque) / 01(Constant torque) / 02(V/f free-setting)	01	01	×	○
	b015	Free-setting electronic thermal frequency (1)	0.−400.Hz	0.	0.	×	○
	b016	Free-setting electronic thermal current (1)	0.0−1000.A	0.0	0.0	×	○
	b017	Free-setting electronic thermal frequency (2)	0.−400.Hz	0.	0.	×	○
	b018	Free-setting electronic thermal current (2)	0.0−1000.A	0.0	0.0	×	○
	b019	Free-setting electronic thermal frequency (3)	0.−400.Hz	0.	0.	×	○
	b020	Free-setting electronic thermal current (3)	0.0−1000.A	0.0	0.0	×	○
Overload Restriction	b021	Overload restriction operation mode	00(Disable)/ 01(Enable during accel./constant speed) / 02(Enable during constant speed) / 03(Enable during accel./constant speed(Speed increase when regenerating))	01	01	×	○
	b022	Overload restriction setting	0.50× rated current-2.00×rated current [-1.80×rated current]	Rated current×1.50	Rated current×1.50	×	○
	b023	Deceleration rate at overload restriction	0.10−30.00	1.00	1.00	×	○
	b024	Overload restriction operation mode (2)	00(Disable) / 01(Enable during accel./constant speed) / 02(Enable during constant speed) / 03(Enable during accel./constant speed(Speed increase when regenerating))	01	01	×	○
	b025	Overload restriction setting (2)	0.50×rated current-2.00×rated current [-1.80×rated current]	Rated current×1.50	Rated current×1.50	×	○
	b026	Deceleration rate at overload restriction (2)	0.10−30.00	1.00	1.00		
Software Lock	b031	Software lock mode selection	00(All parameters except b031 are locked when SFT from terminal is on)/ 01(All parameters except b031 and output frequency F001 are locked when SFT from terminal is on)/ 02(All parameters except b031 are locked)/ 03(All parameters except b031 and output frequency F001 are locked)/ 10(Run-time data edit mode)	01	01	×	○
Others	b034	RUN/ power-on warning time	0.−6553(65,530hr) (Output to intelligent terminal)	0.	0.	×	○
	b035	Rotational direction restriction	00(Enabled for both directions)/ 01(Enabled for forward)/ 02(Enabled for reverse)	00	00	×	×
	b036	Reduced voltage soft start selection	00(Short)−06(Long)	06	06	×	○
	b037	Function code display restriction	00(All)/ 01(Utilized functions)/ 02(User-selected functions only)	00	00	×	○
	b040	Torque limit selection	00(4-quadrant setting)/ 01(Terminal input)/ 02(Analog O2 input) / 03(Expansion card 1)/ 04(Expansion card 2)	00	00	×	○
	b041	Torque limit(1) (Forward-driving in 4-quadrant mode)	0.−200. % / no (Torque limit disable)	150.	150.	×	○
	b042	Torque limit(2) (Reverse-regenerating in 4-quadrant mode)	0.−200. % / no (Torque limit disable)	150.	150.	×	○
	b043	Torque limit(3) (Reverse-driving in 4-quadrant mode)	0.−200. % / no (Torque limit disable)	150.	150.	×	○
	b044	Torque limit(4) (Forward-regenerating in 4-quadrant mode)	0.−200. % / no (Torque limit disable)	150.	150.	×	○
	b045	Torque limit LADSTOP enable	00(Disable)/ 01(Enable)	00	00	×	○
	b046	Reverse RUN protection enable	00(Disable)/ 01(Enable)	00	00	×	○
	b050	Controlled deceleration and stop on power loss	00(Disable)/ 01(Enable)	00	00	×	×
	b051	DC bus voltage trigger level during power loss	0.0−1000.V	0.0	0.0	×	×
	b052	Over-voltage threshold during power loss	0.0−1000.V	0.0	0.0	×	×
	b053	Deceleration time setting during power loss	0.01−99.99/100.0−999.9/1000.−3600.sec.	1.00	1.00	×	×
	b054	Initial output frequency decrease during power loss	0.00−10.00Hz	0.00	0.00	×	×
	b080	AM terminal analog meter adjustment	0−255	180	180	○	○
	b081	FM terminal analog meter adjustment	0−255	60	60	○	○
	b082	Start frequency adjustment	0.10−9.99Hz	0.50	0.50	×	○
	b083	Carrier frequency setting	0.5−15.0kHz (To be derated) [0.5−10kHz]	5.0[3.0]	5.0[3.0]	×	○
	b084	Initialization mode	00(Trip history clear) / 01(Parameter initialization) / 02(Trip history clear and parameter initialization)	00	00	×	×
	b085	Country code for initialization	00(Japanese version)/ 01(European version)/ 02(North American version)	01	02	×	×
	b086	Frequency scaling conversion factor	0.1−99.9	1.0	1.0	○	○
	b087	STOP key enable	00(Enable) / 01(Disable)	00	00	×	○
	b088	Resume on free-run stop cancellation mode	00(Restart at 0Hz) / 01(Resume operation after frequency matching)	00	00	×	○
	b090	Dynamic braking usage ratio	0.0−100.0%	0.0	0.0	×	○
	b091	Stop mode selection	00(Deceleration to stop) / 01(Free-run stop)	00	00	×	×
	b092	Cooling fan control	00(Fan is always ON) / 01(Fan is ON during RUN including 5 min. after power-on and stop)	00	00	×	×
	b095	Dynamic braking control	00(Disable) / 01(Enable during run) / 02(Enable during stop)	00	00	×	○
	b096	Dynamic braking activation level	330−380/ 660−760V	360/720	360/720	×	○
	b098	Thermistor for thermal protection control	00(Disable) / 01(PTC enable) / 02(NTC enable)	00	00	×	○
	b099	Thermistor for thermal protection level setting	0.0−9999.Ω	3000.	3000.	×	○

Note:[ ]75kW and over

[○ = Allowed / × = Not permitted]

	Code	Name	Description	Default Setting -FE(CE)	Default Setting -FU(UL)	Run-time Setting	Run-time Data Edit (Enabled at b031)
Free-setting V/f pattern	b100	Free-setting V/f frequency (1)	0.0−Free-setting V/f frequency (2)	0.	0.	×	×
	b101	Free-setting V/f voltage (1)	0.0−800.0V	0.0	0.0	×	×
	b102	Free-setting V/f frequency (2)	0.0−Free-setting V/f frequency (3)	0.	0.	×	×
	b103	Free-setting V/f voltage (2)	0.0−800.0V	0.0	0.0	×	×
	b104	Free-setting V/f frequency (3)	0.0−Free-setting V/f frequency (4)	0.	0.	×	×
	b105	Free-setting V/f voltage (3)	0.0−800.0V	0.0	0.0	×	×
	b106	Free-setting V/f frequency (4)	0.0−Free-setting V/f frequency (5)	0.	0.	×	×
	b107	Free-setting V/f voltage (4)	0.0−800.0V	0.0	0.0	×	×
	b108	Free-setting V/f frequency (5)	0.0−Free-setting V/f frequency (6)	0.	0.	×	×
	b109	Free-setting V/f voltage (5)	0.0−800.0V	0.0	0.0	×	×
	b110	Free-setting V/f frequency (6)	0.0−Free-setting V/f frequency (7)	0.	0.	×	×
	b111	Free-setting V/f voltage (6)	0.0−800.0V	0.0	0.0	×	×
	b112	Free-setting V/f frequency (7)	0.−400.Hz	0.	0.	×	×
	b113	Free-setting V/f voltage (7)	0.0−800.0V	0.0	0.0	×	×
	b120	Brake control enable	00(Disable) / 01(Enable)	00	00	×	○
	b121	Brake wait time for release	0.00−5.00sec.	0.00	0.00	×	○
	b122	Brake wait time for acceleration	0.00−5.00sec.	0.00	0.00	×	○
	b123	Brake wait time for stopping	0.00−5.00sec.	0.00	0.00	×	○
	b124	Brake wait time for confirmation	0.00−5.00sec.	0.00	0.00	×	○
	b125	Brake release frequency setting	0.00−99.99/100.0−400.0Hz	0.00	0.00	×	○
	b126	Brake release current setting	0.00×rated current to 2.00×rated current	Rated current	Rated current	×	○

●C GROUP: INTELLIGENT TERMINAL FUNCTIONS

[○ = Allowed / × = Not permitted]

	Code	Name	Description	Default Setting -FE(CE)	Default Setting -FU(UL)	Run-time Setting	Run-time Data Edit (Enabled at b031)
Intelligent Input Terminal Setting	C001	Terminal (1) function	01(RV:Reverse) / 02(CF1:Multipeed(1)) / 03(CF2:Multispeed(2)) / 04(CF3:Multi-speed(3)) / 05(CF4:Multispeed(4)) / 06(JG:Jogging) / 07(DB:External DC braking) / 08(SET:Second motor constants setting) / 09(2CH:Second accel./decel.) / 11(FRS:Free-run stop) / 12(EXT:External trip) / 13(USP:Unattended start protection) / 14(CS:Change to/from commercial power supply) / 15(SFT:Software lock) / 16(AT:Analog input selection) / 17(SET3:Third motor constants setting) / 18(RS:Reset) / 20(STA:3-wire start) / 21(STP:3-wire stop) / 22(F/R:3-wire fwd./rev.) / 23(PID:PID On/Off) / 24(PIDC:PID reset) / 26(CAS:Control gain setting) / 27(UP:Remote-controlled accel.) / 28(DWN:Remote-controlled decel.) / 29(UDC:Remote-controlled data clearing) / 31(OPE:Operator control) / 32(SF1:Multispeed bit command(1) / 33(SF2:Multispeed bit command(2) / 34(SF3:Multispeed bit command(3) / 35(SF4:Multispeed bit command(4) / 36(SF5:Multispeed bit command(5) / 37(SF6:Multispeed bit command(6) / 38(SF7:Multispeed bit command(7) / 39(OLR:Overload limit change) / 40(TL:Torque limit enable) / 41(TRQ1:Torque limit selection(1)) / 42(TRQ2:Torque limit selection(2)) / 43(PPI:P/PI selection) / 44(BOK:Brake confirmation signal) / 45(ORT:Orientation) / 46(LAC: LAD cancel) / 47(PCLR:Positioning deviation reset) / 48(STAT:90-degree pulse-train input phase difference permission) / 255 (NO:Not selected)	18 (RS)	18 (RS)	×	○
	C002	Terminal (2) function		16 (AT)	16 (AT)	×	○
	C003	Terminal (3) function		06 (JG)	06 (JG)	×	○
	C004	Terminal (4) function		11 (FRS)	11 (FRS)	×	○
	C005	Terminal (5) function		09 (2CH)	09 (2CH)	×	○
	C006	Terminal (6) function		03 (CF2)	13 (USP)	×	○
	C007	Terminal (7) function		02 (CF1)	02 (CF1)	×	○
	C008	Terminal (8) function		01 (RV)	01 (RV)	×	○
Intelligent Input Terminal State Setting	C011	Terminal (1) active state	00(NO) / 01(NC)	00	00	×	○
	C012	Terminal (2) active state	00(NO) / 01(NC)	00	00	×	○
	C013	Terminal (3) active state	00(NO) / 01(NC)	00	00	×	○
	C014	Terminal (4) active state	00(NO) / 01(NC)	00	00	×	○
	C015	Terminal (5) active state	00(NO) / 01(NC)	00	00	×	○
	C016	Terminal (6) active state	00(NO) / 01(NC)	00	01	×	○
	C017	Terminal (7) active state	00(NO) / 01(NC)	00	00	×	○
	C018	Terminal (8) active state	00(NO) / 01(NC)	00	00	×	○
	C019	Terminal FW active state	00(NO) / 01(NC)	00	00	×	○
Intelligent Output Terminal Setting	C021	Terminal (11) function	00(RUN:Run signal)/ 01(FA1:Frequency arrival signal (at the set frequency))/ 02(FA2:Frequency arrival signal (at or above the set frequency))/ 03(OL:Overload advance notice signal)/ 04(OD:Output deviation for PID control)/ 05(AL:Alarm signal)/ 06(FA3:Frequency arrival signal (only at the set frequency))/ 07(OTQ:Over-torque) / 08(IP:Instantaneous power failure signal)/ 09(UV:Under-voltage signal)/ 10(TRQ:In torque limit)/ 11(RNT:RUN time over)/ 12(ONT:Power-on time over)/ 13(THM:Thermal alarm)/ 19(BRK:Brake release)/ 20(BER:Brake error)/ 21(ZS:Zero speed) 22(DSE:Speed deviation excessive) / 23(POK:Positioning completion) 24(FA4:Frequency arrival signal (at or above the set frequency)(2))/ 25(FA5:Frequency arrival signal (only at the set frequency)(2))/ 26(OL2:Overload advance notice signal(2)) (Terminal 11−13 or 11−14 are automatically configured as AC0-AC2 or AC0-AC3 per alarm code output selection)	01 (FA1)	01 (FA1)	×	○
	C022	Terminal (12) function		00 (RUN)	00 (RUN)	×	○
	C023	Terminal (13) function		03 (OL)	03 (OL)	×	○
	C024	Terminal (14) function		07 (OTQ)	07 (OTQ)	×	○
	C025	Terminal (15) function		08 (IP)	08 (IP)	×	○
	C026	Alarm relay terminal function		05 (AL)	05 (AL)	×	○
	C027	FM signal selection	00(Output frequency) / 01(Output current) / 02(Output torque) / 03(Digital output frequency-only at C027) / 04(Output voltage) / 05(Power) / 06(Thermal load ratio) / 07(LAD frequency)	00	00	×	○
	C028	AM signal selection		00	00	×	○
	C029	AMI signal selection		00	00	×	○

[○= Allowed
×= Not permitted]

	Code	Name	Description	Default Setting -FE(CE)	Default Setting -FU(UL)	Run-time Setting	Run-time Data Edit (Enabled at b031)
Free-setting V/f pattern	C031	Terminal (11) active state	00(NO) / 01(NC)	00	00	×	○
	C032	Terminal (12) active state	00(NO) / 01(NC)	00	00	×	○
	C033	Terminal (13) active state	00(NO) / 01(NC)	00	00	×	○
	C034	Terminal (14) active state	00(NO) / 01(NC)	00	00	×	○
	C035	Terminal (15) active state	00(NO) / 01(NC)	00	00	×	○
	C036	Alarm relay terminal active state	00(NO) / 01(NC)	01	01	×	○
	C040	Overload signal output mode	00(During accel./decel) / 01(At constant speed)	01	01	×	○
	C041	Overload level setting	0.00×rated current-2.00×rated current	Rated current	Rated current	×	○
	C042	Arrival frequency setting for acceleration	0.00−99.99/ 100.0−400.0Hz	0.00	0.00	×	○
	C043	Arrival frequency setting for deceleration	0.00−99.99/ 100.0−400.0Hz	0.00	0.00	×	○
	C044	PID deviation level setting	0.0−100%	3.0	3.0	×	○
	C045	Arrival frequency setting for acceleration(2)	0.00−99.99/ 100.0−400.0Hz	0.00	0.00	×	○
	C046	Arrival frequency setting for deceleration(2)	0.00−99.99/ 100.0−400.0Hz	0.00	0.00	×	○
	C055	Over-torque(Forward-driving) level setting	0.−200.% [0.−180.%]	100.	100.	×	○
	C056	Over-torque(Reverse-regenerating) level setting	0.−200.% [0.−180.%]	100.	100.	×	○
	C057	Over-torque(Reverse-driving) level setting	0.−200.% [0.−180.%]	100.	100.	×	○
	C058	Over-torque(Forward-regenerating) level setting	0.−200.% [0.−180.%]	100.	100.	×	○
	C061	Electronic thermal warning level setting	0.−100.%	80.	80.	×	○
	C062	Alarm code input	00(Disabled) / 01(3-bit) / 02(4-bit)	00	00	×	○
	C063	Zero speed detection level	0.00-99.99/100.0Hz	0.00	0.00	×	○
Serial Communication	C070	Data command method	02(Operator) / 03(RS-485) / 04 (Expansion card 1) / 05(Expansion card 2)	02	02	×	×
	C071	Communication speed selection	02(Test) / 03(2400bps) / 04(4800bps) / 05(9600bps) / 06(19200bps)	04	04	×	○
	C072	Node allocation	1.−32.	1.	1.	×	○
	C073	Communication data length selection	7(7-bit) / 8(8-bit)	7	7	×	○
	C074	Communication parity selection	00(No parity) / 01(Even) / 02(Odd)	00	00	×	○
	C075	Communication stop bit selection	1(1-bit) / 2(2-bit)	1	1	×	○
	C078	Communication wait time	0.−1000.msec.	0.	0.	×	○
Analog Meter Setting	C081	O input span calibration	0−6553(65,530)	Factory set	Factory set	○	○
	C082	OI input span calibration	0−6553(65,530)	Factory set	Factory set	○	○
	C083	O2 input span calibration	0−6553(65,530)	Factory set	Factory set	○	○
	C085	Thermistor input tuning	0.0−1000.	105.0	105.0	○	○
	C086	AM terminal offset tuning	0.0−10.0V	0.0	0.0	○	○
	C087	AMI terminal meter tuning	0.−255.%	80.	80.	○	○
	C088	AMI terminal offset tuning	0.−20.0mA	4.0	4.0	○	○
Others	C091	Debug mode enable	00(No display) / 01(Display)	00	00	×	○
	C101	UP/DOWN memory mode selection	00(Clear previous frequency) / 01(Keep previous frequency)	00	00	×	○
	C102	Reset mode selection	00(Cancel trip state when reset signal turns ON) / 01(Cancel trip state when reset signal turns OFF) / 02(Cancel trip state when reset signal turns ON(Enable during trip state))	00	00	×	○
	C103	Restart frequency after reset	00(Restart at 0Hz) / 01(Resume operation after frequency matching)	00	00	×	○
	C111	Overload level setting(2)	0.00×rated current-2.00×rated current	Rated current	Rated current	×	○
	C121	O input zero calibration	0.−9999./ 1000−6553(10,000−65,530)	Factory set	Factory set	○	○
	C122	OI input zero calibration	0.−9999./ 1000−6553(10,000−65,530)	Factory set	Factory set	○	○
	C123	O2 input zero calibration	0.−9999./ 1000−6553(10,000−65,530)	Factory set	Factory set	○	○

●H GROUP: MOTOR CONSTANTS FUNCTIONS

[○= Allowed
×= Not permitted]

	Code	Name	Description	Default Setting -FE(CE)	Default Setting -FU(UL)	Run-time Setting	Run-time Data Edit (Enabled at b031)
Motor Constants and Gain Setting	H001	Auto-tuning setting	00(NOR:Disable) / 01(NOR:No rotation) / 02(AUT:Rotation)	00	00	×	×
	H002	Motor data selection for first motor	00(Hitachi standard motor) / 01(Auto-data) / 02(Adaptive-data)	00	00	×	×
	H202	Motor data selection for second motor	00(Hitachi standard motor) / 01(Auto-data) / 02(Adaptive-data)	00	00	×	×
	H003	Motor capacity	0.20−75.0(kW) [0.2−160(kW)]	Factory set	Factory set	×	×
	H203	Motor capacity for second motor	0.20−75.0(kW) [0.2−160(kW)]	Factory set	Factory set	×	×
	H004	Motor poles setting	2/4/6/8	4	4	×	×
	H204	Motor poles setting for second motor	2/4/6/8	4	4	×	×
	H005	Motor speed constant	0.001−9.999/10.00−65.53	1.590	1.590	○	○
	H205	Motor speed constant for second motor	0.001−9.999/10.00−65.53	1.590	1.590	○	○
	H006	Motor stabilization constant	0.−255.	100.	100.	○	○
	H206	Motor stabilization constant for second motor	0.−255.	100.	100.	○	○
	H306	Motor stabilization constant for third motor	0.−255.	100.	100.	○	○
	H020	Motor constant R1 setting for first motor	0.000−9.999/10.00−65.53	According to capacity	According to capacity	×	×
	H220	Motor constant R1 setting for second motor	0.000−9.999/10.00−65.53	According to capacity	According to capacity	×	×
	H021	Motor constant R2 setting for first motor	0.000−9.999/10.00−65.53	According to capacity	According to capacity	×	×
	H221	Motor constant R2 setting for second motor	0.000−9.999/10.00−65.53	According to capacity	According to capacity	×	×
	H022	Motor constant L setting for first motor	0.00−9.99/100.00−655.3	According to capacity	According to capacity	×	×
	H222	Motor constant L setting for second motor	0.00−9.99/100.00−655.3	According to capacity	According to capacity	×	×

Note:[ ]75kW and over

[○ = Allowed
× = Not permitted]

	Code	Name	Description	Default Setting -FE(CE)	Default Setting -FU(UL)	Run-time Setting	Run-time Data Edit (Enabled at b031)
Motor Constants and Gain Setting	H023	Motor constant I0 setting for first motor	0.00−9.99/100.00−655.3	*	*	×	×
	H223	Motor constant I0 setting for second motor	0.00−9.99/100.00−655.3	*	*	×	×
	H024	Motor constant J setting for first motor	1.0−999.9/1000.−9999.	*	*	×	×
	H224	Motor constant J setting for second motor	1.0−999.9/1000.−9999.	*	*	×	×
	H030	Auto R1 setting for first motor	0.000−9.999/10.00−65.53	*	*	×	×
	H230	Auto R1 setting for second motor	0.000−9.999/10.00−65.53	*	*	×	×
	H031	Auto R2 setting for first motor	0.000−9.999/10.00−65.53	*	*	×	×
	H231	Auto R2 setting for second motor	0.000−9.999/10.00−65.53	*	*	×	×
	H032	Auto L setting for first motor	0.00−9.99/100.00−655.3	*	*	×	×
	H232	Auto L setting for second motor	0.00−9.99/100.00−655.3	*	*	×	×
	H033	Auto I0 setting for first motor	0.00−9.99/100.00−655.3	*	*	×	×
	H233	Auto I0 setting for second motor	0.00−9.99/100.00−655.3	*	*	×	×
	H034	Auto J setting for first motor	1.0−999.9/1000.	*	*	×	×
	H234	Auto J setting for second motor	1.0−999.9/1000.	*	*	×	×
	H050	PI proportional gain for first motor	0.0−99.9/100.0−999.9/1000.%	100.0	100.0	○	○
	H250	PI proportional gain for second motor	0.0−99.9/100.0−999.9/1000.%	100.0	100.0	○	○
	H051	PI integral gain for first motor	0.0−99.9/100.0−999.9/1000.%	100.0	100.0	○	○
	H251	PI integral gain for second motor	0.0−99.9/100.0−999.9/1000.%	100.0	100.0	○	○
	H052	P proportional gain for first motor	0.00−10.00	1.00	1.00	○	○
	H252	P proportional gain for second motor	0.00−10.00	1.00	1.00	○	○
	H060	Zero SLV limit for first motor	0.−100.%	100.	100.	○	○
	H260	Zero SLV limit for second motor	0.−100.%	100.	100.	○	○
	H070	PI proportional gain setting	0.0−99.99/100.0−999.9/1000.%	100.0	100.0	○	○
	H071	PI integral gain setting	0.0−99.99/100.0−999.9/1000.%	100.0	100.0	○	○
	H072	P proportional gain setting	0.00−10.00	1.00	1.00	○	○

*Accoding to capacity

●P GROUP: EXPANSION CARD FUNCTIONS

[○ = Allowed
× = Not permitted]

	Code	Name	Description	Default Setting -FE(CE)	Default Setting -FU(UL)	Run-time Setting	Run-time Data Edit (Enabled at b031)
Option Setting	P001	Operation mode on expansion card 1 error	00(Trip) / 01(Continuous operation)	00	00	×	○
	P002	Operation mode on expansion card 2 error	00(Trip) / 01(Continuous operation)	00	00	×	○
	P010	Feedback option enable	00(Disable) / 01(Enable)	00	00	×	×
	P011	Encoder pulse per revolution setting	128.−9999./ 1000−6500(10,000-65,000)pulses	1024	1024	×	×
	P012	Control pulse setting	00(ASR mode) / 01(APR mode)	00	00	×	×
	P013	Pulse input mode setting	00/01/02/03	00	00	×	×
	P014	Home search stop position setting	0.−4095.pulses	0.	0.	×	○
	P015	Home search speed setting	0.00−99.99/100.0−120.0Hz	5.00	5.00	×	○
	P016	Home search direction setting	00(Forward) / 01(Reverse)	00	00	×	×
	P017	Home search completion range setting	0.−9999./1000(10,000)pulses	5.	5.	×	○
	P018	Home search completion delay time setting	0.00−9.99sec.	0.00	0.00	×	○
	P019	Electronic gear set position selection	00(Positioning feedback side) / 01(Positioning command side)	00	00	×	○
	P020	Electronic gear ratio numerator setting	0.−9999.	1.	1.	×	○
	P021	Electronic gear ratio denominator setting	0.−9999.	1.	1.	×	○
	P022	Feed-forward gain setting	0.00−99.99 / 100.0−655.3	0.00	0.00	×	○
	P023	Position loop gain setting	0.00−99.99/100.0	0.50	0.50	×	○
	P025	Temperature compensation thermistor enable	00(Disable) / 01(Enable)	00	00	×	○
	P026	Over-speed error detection level setting	0.00−99.99/100.0-150.0%	135.0	135.0	×	○
	P027	Speed deviation error detection level setting	0.00−99.99/100.0-120.0Hz	7.50	7.50	×	○
	P031	Accel./decel. time input selection	00(SJ300) / 01(Expantion card 1) / 02(Expantion card 2)	00	00	×	×
	P032	Positioning command input selection	00(SJ300) / 01(Expantion card 1) / 02(Expantion card 2)	00	00	×	○
	P044	DeviceNet comm watchdog timer	0.00-99.99	1.00	1.00	×	×
	P045	Inverter action on DeviceNet comm error	00(Trip) / 01(Decelerate and trip) / 02(Hold last speed) / 03(Free run stop) / 04(Decelerate and stop)	01	01	×	×
	P046	DeviceNet polled I/O : Output instance number	20 / 21 / 100	21	21	×	×
	P047	DeviceNet polled I/O: Input instance number	70/71/101	71	71	×	×
	P048	Inverter action on DeviceNet idle mode	00(Trip) / 01 (Decelerate and trip) / 02 (Hold lost speed) / 03 (Free run stop) / 04 (Decelerate and stop)	01	01	×	×
	P049	DeviceNet motor poles setting for RPM	00-38	00	00	×	×

●U GROUP: USER-SELECTABLE MENU FUNCTIONS

[○ = Allowed
× = Not permitted]

	Code	Name	Description	Default Setting -FE(CE)	Default Setting -FU(UL)	Run-time Setting	Run-time Data Edit (Enabled at b031)
User's Selection	U001 I U012	User selected functions	no / d001-P032	no	no	×	○

TERMINALS

MAIN CIRCUIT TERMINALS

●Terminal Description

Terminal Symbol	Terminal Name
R(L1), S(L2), T(L3)	Main power supply input terminals
U(T1), V(T2), W(T3)	Inverter output terminals
PD(+1), P(+)	DC reactor connection terminals
P(+), RB(RB)	External braking resistor connection terminals
P(+), N(–)	External braking unit connection terminals
⏚ (G)	Ground connection terminal
R_0(R_0), T_0(T_0)	Control power supply input terminals

●Terminal Arrangement

■004LFU, 007–055LFU/HFE, HFU

		R (L1)	S (L2)	T (L3)	U (T1)	V (T2)	W (T3)
R_0 (R_0)	T_0 (T_0)	PD (+1)	P (+)	N (–)	RB (RB)	⏚ (G)	⏚ (G)

■075–110LFU/HFE, HFU

R (L1)	S (L2)	T (L3)	U (T1)	V (T2)	W (T3)		
PD (+1)	P (+)	N (–)	RB (RB)	⏚ (G)	⏚ (G)	R_0 (R_0)	T_0 (T_0)

■150–185, 300–370LFU
150–550HFE, HFU

											R_0 (R_0)	T_0 (T_0)
⏚ (G)	R (L1)	S (L2)	T (L3)	PD (+1)	P (+)	N (–)	U (T1)	V (T2)	W (T3)	⏚ (G)		

■220, 450, 550LFU
750–1100HFE, HFU
1320HFE, 1500HFU
4000HFE, HFU

											R_0 (R_0)	T_0 (T_0)
	R (L1)	S (L2)	T (L3)	PD (+1)	P (+)	N (–)	U (T1)	V (T2)	W (T3)			
⏚ (G)										⏚ (G)		

●Screw Diameter and Terminal Width

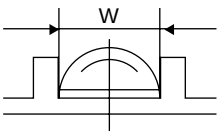

W:Terminal width

Model	Screw diameter	Terminal width (mm)	
004LFU, 007-037LFU/HFE, HFU	M4	13	
055LFU/HFE, HFU	M5	13	
075LFU/HFE, HFU	M5	17.5	
110LFU/HFE, HFU	M6	17.5	
150, 185LFU/150–370HFE, HFU	M6	18	
220–370LFU/550HFE, HFU	M8	23	*1
750, 900 HFE, HFU	M10	29	
450LFU	M10	35	
550LFU, 1100HFE, HFU, 1320HFE, 1500HFU	M10	40	*2
4000HFE,HFU	M12	50	
R_0T_0 terminals (All models)	M4	9	

*1 For Ground Screw of 220LFU, M6 is used
*2 Ground Screw diameter is M8

CONTROL CIRCUIT TERMINALS

●Terminal Arrangement

	H	O2	AM	FM	TH	FW	8	CM1	5	3	1	14	13	11	AL1	
L	O	OI	AM1	P24	PLC	CM1	7	6	4	2	15	CM2	12	AL0	AL2	

Screw diameter:M3 Terminal Width:6.4mm

●Terminal Description [ ]: Default setting (CE/UL)

			Symbol	Name	Explanation of Terminals	Ratings
Analog	Power Supply		L	Common Terminal for Analog Power Source	Common terminal for H, O, O2, OI, AM, and AMI. Do not ground.	—
			H	Power Source for Frequency Setting	Power supply for frequency command input	DC 10V, 20mA max.
	Frequency Setting		O	Frequency Command Terminal	Maximum frequency is attained at DC 10V in DC 0−10V range. Set the voltage at A014 to command maximum frequency below DC 10V.	Input impedance: 10kΩ, Allowable input voltage range: DC −0.3−+12V
			O2	Frequency Command Extra Terminal	O2 signal is added to the frequency command of O or OI in DC 0−±10V range. By changing configuration, frequency command can be input also at O2 terminal.	Input impedance:10kΩ, Allowable input voltage range: DC 0−±12V
			OI	Frequency Command Terminal	Maximum frequency is attained at DC 20mA in DC 4−20mA range. When the intelligent terminal configured as AT is on, OI signal is enabled.	Input impedance: 100Ω, Allowable input voltage range: DC 0−24mA
	Monitor Output		AM	Analog Output Monitor (Voltage)	Selection of one function from: Output frequency, output current, torque, output voltage, input power, electronic thermal load ratio, and LAD frequency.	DC 0−10V, 2mA max.
			AMI	Analog Output Monitor (Current)		DC 4−20mA, 250Ω max.
Digital	Monitor Output		FM	Digital Monitor (Voltage)	[DC0-10V output (PWM output)] Selection of one function from: Output frequency, output current, torque, output voltage, input power, electronic thermal load ratio, and LAD frequency. [Digital pulse output (Pulse voltage DC 0/10V)] Outputs the value of output frequency as digital pulse (duty 50%)	Digital output frequency range: 0−3.6kHz, 1.2mA max.
	Power Supply		P24	Power Terminal for Interface	Internal power supply for input terminals. In the case of source type logic, common terminal for contact input terminals.	DC 24V, 100mA max.
			CM1	Common Terminal for Interface	Common terminal for P24, TH, and FM. In the case of sink type logic, common terminal for contact input terminals. Do not ground.	—
	Contact Input	Run Command	FW	Forward Command Input	The motor runs forward when FW terminal is ON, and stops when FW is OFF.	[Input ON condition] Voltage between each terminal and PLC: DC 18V min. [Input OFF condition] Voltage between each terminal and PLC: DC 3V max. Input impedance between each terminal and PLC: 4.7Ω Allowable maximum voltage between each terminal and PLC: DC 27V
		Functions	1 [RS/RS] 2 [AT/AT] 3 [JG/JG] 4 [FRS/FRS] 5 [2CH/2CH] 6 [CF2/USP] 7 [CF1/CF1] 8 [RV/RV]	Intelligent Input Terminals	Assign 8 functions to terminals. (Refer to the standard specifications for the functions.)	
		Common Terminal	PLC	Common Terminal for Intelligent Input Terminals, Common Terminal for External Power Supply for PLCs, etc.	Select sink or source logic with the short-circuit bar on the control terminals. Sink logic: Short P24 to PLC / Source logic: Short CM1 to PLC. When applying external power source, remove the short-circuit bar and connect PLC terminal to the external device.	
	Open Collector Output	State	11 [FA1/FA1] 12 [RUN/RUN] 13 [OL/OL] 14 [OTQ/OTQ] 15 [IP/IP]	Intelligent Output Terminals	Assign 5 functions to open collector outputs. When the alarm code is selected at C062, terminal 11−13 or 11−14 are reserved for error codes of inverter trip. (Refer to the standard specifications for the functions.) Both sink and source logic are always applicable between each terminal and CM1.	Decrease in voltage between each terminal and CM2: 4V max. during ON Allowable maximum voltage: DC 27V Allowable maximum current: 50mA
			CM2	Common Terminal for Intelligent Output Terminals	Common terminal for intelligent output terminal 11−15.	
Analog	Analog Input	Sensor	TH	Thermistor Input Terminals	The inverter trips when the external thermistor detects abnormal temperature. Common terminal is CM1. [Recommended thermistor characteristics] Allowable rated power: 100mW or over. Impedance in the case of abnormal temperature: 3kΩ Note: Thermal protection level can be set between 0 and 9999Ω.	Allowable input voltage range 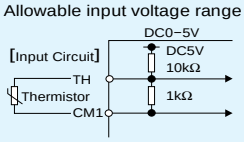
Digital	Relay Output	State/ Alarm	AL0 AL1 AL2 [AL/AL]	Alarm Output Terminals	In default setting, an alarm is activated when inverter output is turned off by a protective function.	Maximum capacity of relays AL1−AL0: AC 250V, 2A(R load)/0.2A(L load) DC 30V, 8A(R load)/0.6A(L load) AL2−AL0: AC 250V, 1A(R load)/0.2A(L load) DC 30V, 1A(R load)/0.2A(L load) Minimum capacity of relays AL1−AL0, AL2−AL0: AC100V, 10mA DC5V, 100mA

PROTECTIVE FUNCTIONS

Name	Cause(s)		Display on digital operator	Display on remote operator/copy unit ERR1****
Over-current protection	The inverter output was short-circuited, or the motor shaft is locked or has a heavy load. These conditions cause excessive current for the inverter, so the inverter output is turned off.	While at constant speed	E01	OC.Drive
		During deceleration	E02	OC.Decel
		During acceleration	E03	OC.Accel
		Others	E04	Over.C
Overload protection(*1)	When a motor overload is detected by the electronic thermal function, the inverter trips and turns off its output.		E05	Over.L
Braking resistor overload protection	When the regenerative braking resistor exceeds the usage time allowance or an over-voltage caused by the stop of the BRD function is detected, the inverter trips and turns off its output.		E06	OL.BRD
Over-voltage protection	When the DC bus voltage exceeds a threshold, due to regenerative energy from the motor, the inverter trips and turns off its output.		E07	Over.V
EEPROM error(*2)	When the built-in EEPROM memory has problems due to noise or excessive temperature, the inverter trips and turns off its output.		E08	EEPROM
Under-voltage error	A decrease of internal DC bus voltage below a threshold results in a control circuit fault. This condition can also generate excessive motor heat or cause low torque. The inverter trips and turns off its output.		E09	Under.V
CT(Current transformer) error	If a strong source of electrical interference is close to the inverter or abnormal operations occur in the built-in CT, the inverter trips and turns off its output.		E10	CT
CPU error	When a malfunction in the built-in CPU has occurred, the inverter trips and turns off its output.		E11	CPU
External trip	When a signal to an intelligent input terminal configured as EXT has occurred, the inverter trips and turns off its output.		E12	EXTERNAL
USP error	An error occurs when power is cycled while the inverter is in RUN mode if the Unattended Start Protection (USP) is enabled. The inverter trips and does not go into RUN mode until the error is cleared.		E13	USP
Ground fault	The inverter is protected by the detection of ground faults between the inverter output and the motor during power-up tests. This feature protects the inverter only.		E14	GND.Flt.
Input over-voltage protection	When the input voltage is higher than the specified value, it is detected 60 seconds after power-up and the inverter trips and turns of its output.		E15	OV.SRC
Instantaneous power failure	When power is cut for more than 15ms, the inverter trips and turns off its output. If power failure continues, the error will be cleared. The inverter restarts if it is in RUN mode when power is cycled.		E16	Inst.P-F
Inverter thermal trip	When the inverter internal temperature is higher than the specified value, the thermal sensor in the inverter module detects the higher temperature of the power devices and trips, turning off the inverter output.		E21	OH FIN
Gate array error	Communication error has occurred between CPU and gate array.		E23	GA
Phase loss detection	One of three lines of 3-phase power supply is missing.		E24	PH.Fail
IGBT error	When an instantaneous over-current has occurred, the inverter trips and turns off its output to protect main circuit element.		E30	IGBT
Thermistor error	When the thermistor inside the motor detects temperature higher than the specified value, the inverter trips and turns off its output.		E35	TH
Braking error	The inverter turns off its output when it can not detect whether the braking is ON or OFF within waiting time set at b024 after it has released the brake. (When braking is enabled at b120)		E36	BRAKE
Out of operation due to under-voltage	Due to insufficient voltage, the inverter has turned off its output and been trying to restart. If it fails to restart, it goes into the under-voltage error.		----	UV.WAIT
Expansion card 1 connection error	An error has been detected in an expansion card or at its connecting terminals.		E60~E69	OP1-0 ~ OP1-9
Expansion card 2 connection error			E70~E79	OP2-0 ~ OP2-9

*1: Reset operation is acceptable 10 seconds after the trip. *2: Check the parameters when EEP ROM error occurs.

〈Status Display〉

Code	Description	Code	Description
0	Reset	5	f0 Stop
1	Stop	6	Starting
2	Deceleration	7	DB
3	Constant Speed	8	Overload Restriction
4	Acceleration	9	Auto-tuning

〈How to access the details about the present fault〉

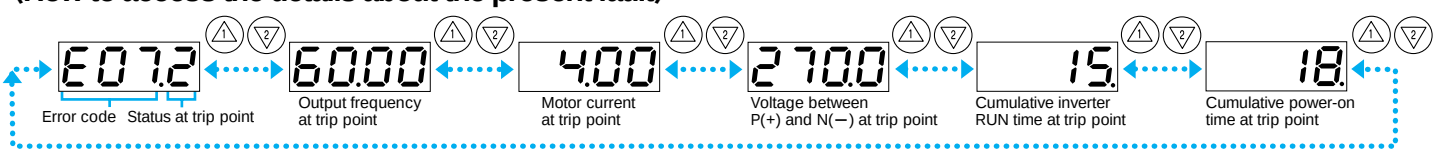

CONNECTING DIAGRAM

■Source type logic

In case of 400V class, place a transformer for operating circuit to receive 200V.

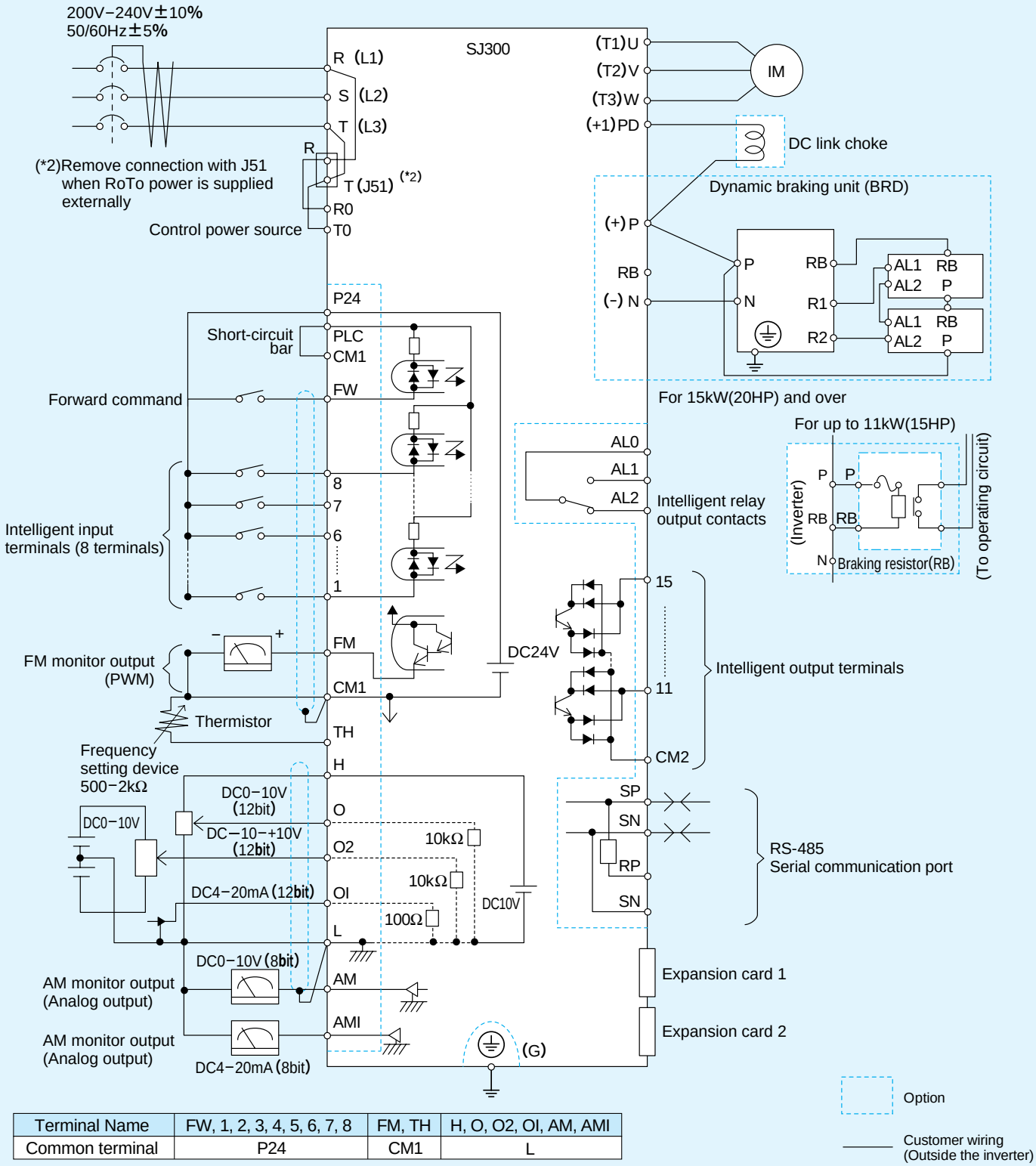

Terminal Name	FW, 1, 2, 3, 4, 5, 6, 7, 8	FM, TH	H, O, O2, OI, AM, AMI
Common terminal	P24	CM1	L

■Sink type logic

In case of 400V class, place a transformer for operating circuit to receive 200V.

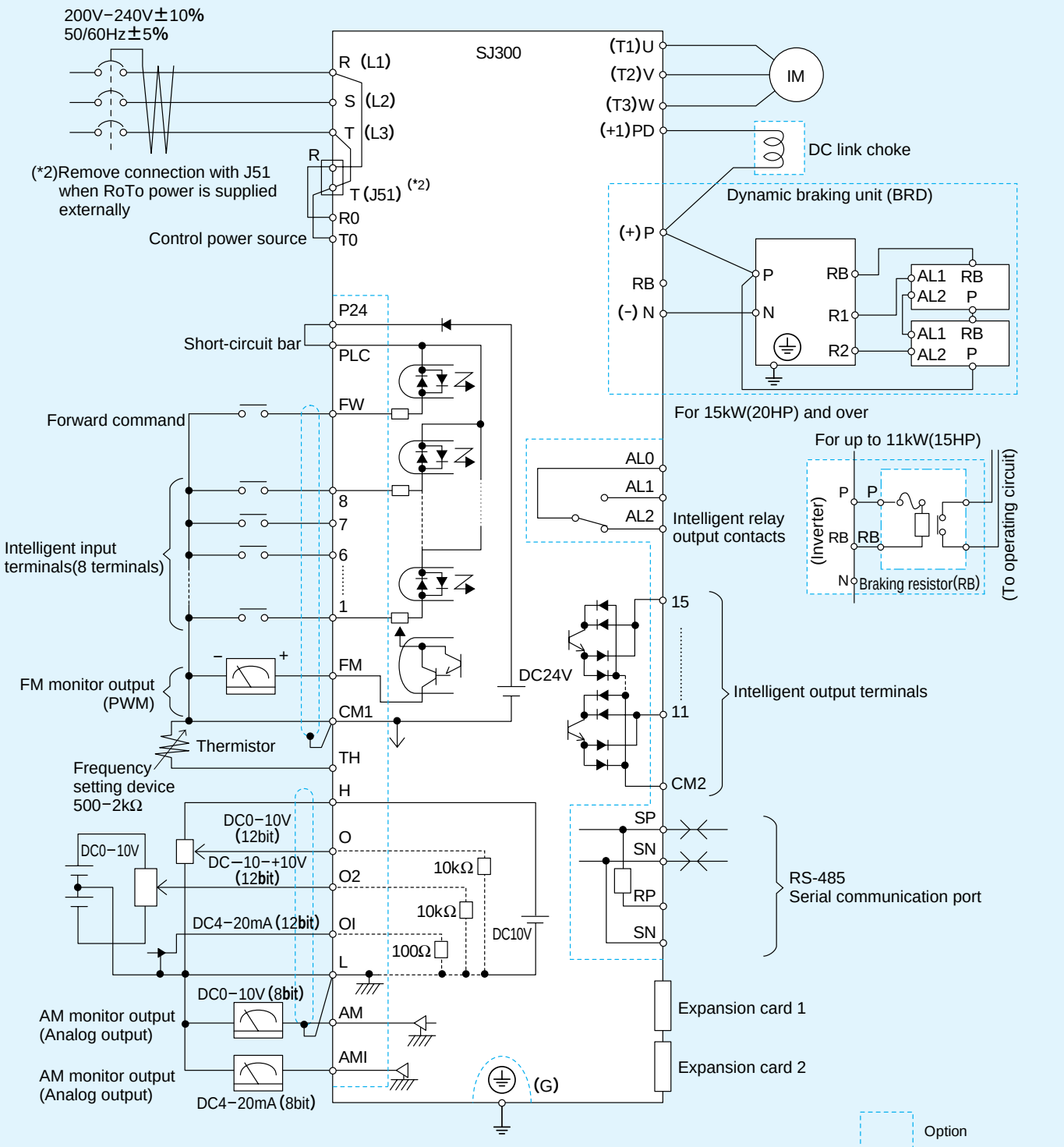

Terminal Name	FW, 1, 2, 3, 4, 5, 6, 7, 8, FM, TH	H, O, O2, OI, AM, AMI
Common terminal	CM1	L

CONNECTING TO PLC

●CONNECTION WITH INPUT TERMINALS

1. USING INTERNAL POWER SUPPLY OF THE INVERTER

(1) Sink type logic

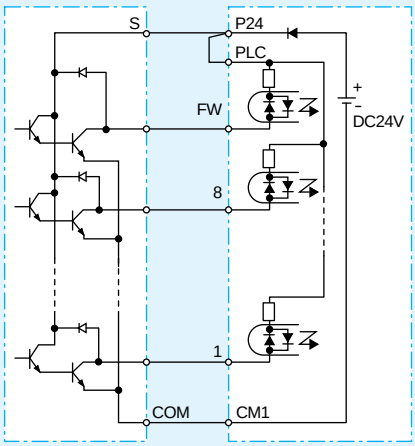

Hitachi EH-150 series PLC Output Module EH-YT16 — SJ300

(2) Source type logic

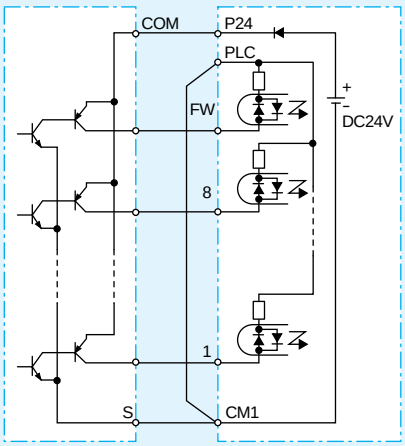

Hitachi EH-150 series PLC Output Module EH-YTP16 — SJ300

(Note: Place short-circuit bar between PLC and CM1 instead of P24 and PLC)

2.USING EXTERNAL POWER SUPPLY

(1) Sink type logic

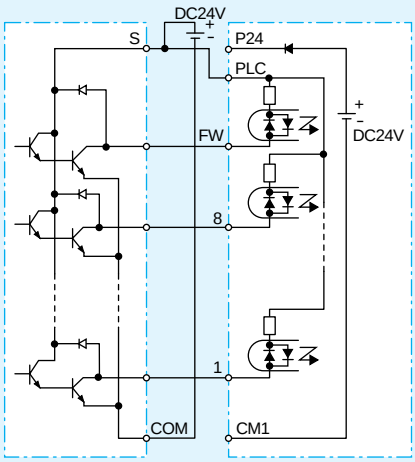

Hitachi EH-150 series PLC Output Module EH-YT16 — SJ300

(Note: Remove short-circuit bar between P24 and PLC)

(2) Source type logic

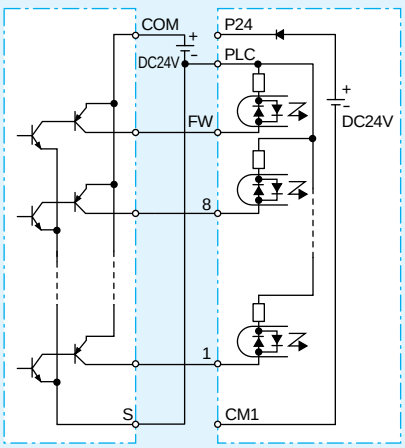

Hitachi EH-150 series PLC Output Module EH-YTP16 — SJ300

(Note: Remove short-circuit bar between P24 and PLC)

(Note: Be sure to turn on the inverter after turning on the PLC and its external power source to prevent the parameters in the inverter from being modified.)

●CONNECTION WITH OUTPUT TERMINALS

(1) Sink type logic

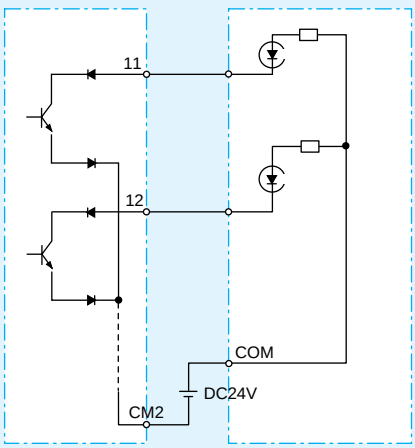

SJ300 — Hitachi EH-150 series PLC Input Module EH-XD16

(2) Source type logic

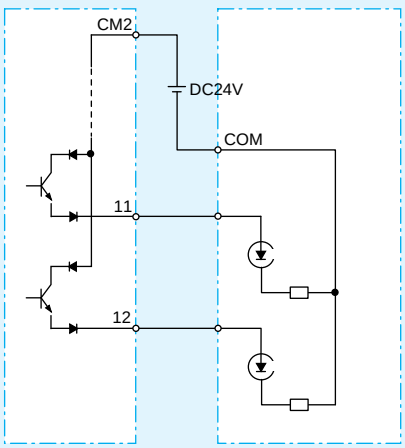

SJ300 — Hitachi EH-150 series PLC Input Module EH-XD16

WIRING and ACCESSORIES

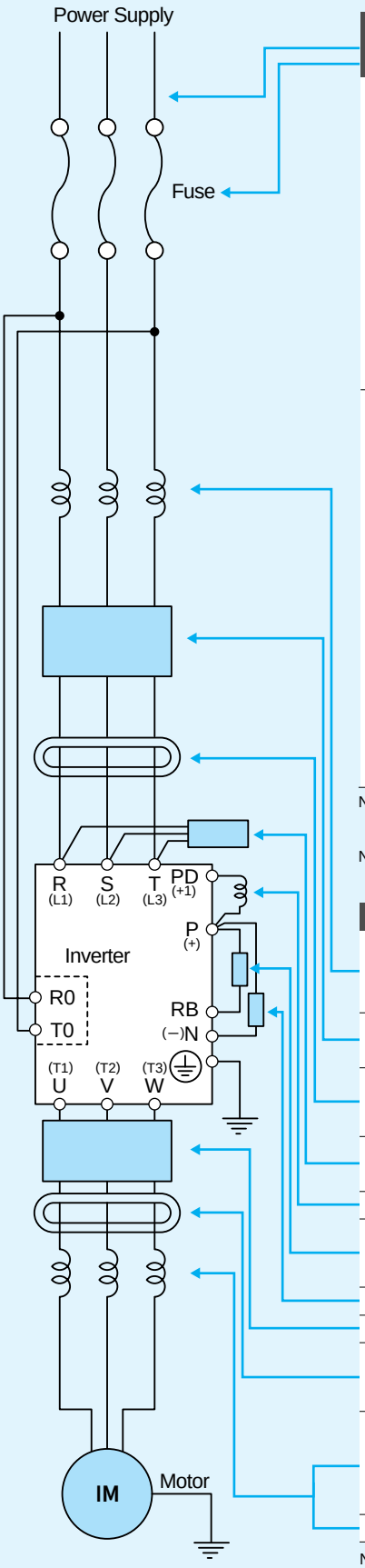

Input Voltage	Motor Output (kW(HP))	Model	Wiring: Power Lines AWG	Wiring: Power Lines mm²	Wiring: Signal Lines	Fuse (Class J)
200V	0.4(1/2)	SJ300-004LFU	20	0.5	0.75mm² shielded wire	10
	0.7(1)	SJ300-007LFU	18	0.8		10
	1.5(2)	SJ300-015LFU	14	2.1		10
	2.2(3)	SJ300-022LFU	14	2.1		15
	3.7(5)	SJ300-037LFU	10	5.3		20
	5.5(7.5)	SJ300-055LFU	8	8.4		30
	7.5(10)	SJ300-075LFU	6	13.3		40
	11(15)	SJ300-110LFU	4	21.2		60
	15(20)	SJ300-150LFU	2	33.6		80
	18.5(25)	SJ300-185LFU	4×2	21.2×2		100
	22(30)	SJ300-220LFU	4×2	21.2×2		125
	30(40)	SJ300-300LFU	2×2	33.6×2		150
	37(50)	SJ300-370LFU	2×2	33.6×2		175
	45(60)	SJ300-450LFU	1×1 (75℃)	42.4×2		225
	55(75)	SJ300-550LFU	2/0×2	53.5×2		250
400V	0.7(1)	SJ300-007HFU/E	20	0.5	0.75mm² shielded wire	10
	1.5(2)	SJ300-015HFU/E	18	0.8		10
	2.2(3)	SJ300-022HFU/E	16	1.3		10
	3.7(5)	SJ300-040HFU/E	14	2.1		15
	5.5(7.5)	SJ300-055HFU/E	12	3.3		15
	7.5(10)	SJ300-075HFU/E	10	5.3		20
	11(15)	SJ300-110HFU/E	8	8.4		30
	15(20)	SJ300-150HFU/E	6	13.3		40
	18.5(25)	SJ300-185HFU/E	6	13.3		50
	22(30)	SJ300-220HFU/E	4	21.2		60
	30(40)	SJ300-300HFU/E	3	26.7		70
	37(50)	SJ300-370HFU/E	4×2	21.2×2		90
	45(60)	SJ300-450HFU/E	1×1 (75℃)	42.4		125
	55(75)	SJ300-550HFU/E	2×2	33.6×2		125
	75(100)	SJ300-750HFU/E	1×1 (75℃)	42.4×2		175
	90(125)	SJ300-900HFU/E	1×1 (75℃)	42.4×2		200
	110(150)	SJ300-1100HFU/E	1/0×2	53.5×2		250
	132 (175)	SJ300-1320HFE	3/0×2	85.0×2		300
	150 (200)	SJ300-1500HFU	3/0×2	85.0×2		300

Note 1: Field wiring connection must be made by a UL and c-UL listed closed-loop terminal connector sized for the wire gauge involved.
Connector must be fixed using the crimping tool specified by the connector manufacturer.
Note 2: Be sure to use large wire gauges for power wiring if the distance exceeds 20m (66ft).

Name	Function
Input side AC reactor	This is useful in suppressing harmonics induced on the power supply lines, or when the main power voltage imbalance exceeds 3% (and power source capacity is more than 500kVA), or to smooth out line fluctuations. It also improves the power factor.
EMI filter	Reduces the conducted noise on the power supply wiring generated by the inverter. Connect to the inverter input side.
Radio noise filter	Electrical noise interference may occur on nearby equipment such as a radio receiver. This magnetic choke filter helps reduce radiated noise (can also be used on output).
Radio noise filter (Capacitor filter)	This capacitor filter reduces radiated noise from the main power wires in the inverter input side.
DC link choke	Suppresses harmonics generated by the inverter.
Braking resistor	This is useful for increasing the inverter's control torque for high duty-cycle (on-off) applications, and improving the decelerating capability.
Braking unit	
Output side noise filter	Reduces radiated noise from wiring in the inverter output side.
Radio noise filter	Electrical noise interference may occur on nearby equipment such as a radio receiver. This magnetic choke filter helps reduce radiated noise (can also be used on input).
AC reactor	This reactor reduces the vibration in the motor caused by the inverter's switching waveforms, by smoothing the waveforms to approximate commercial power quality. It is also useful when wiring from the inverter to the motor is more than 10m in length, to reduce harmonics.
LCR filter	Sine wave shaping filter for the output side.

Note: An EMI filter is required for European EMC directive and C-Tick, but the others are not for this purpose.

ACCESSORIES

■OPERATOR, CABLE

●OPERATOR

Model	Potentiometer	Remote Control	Installation in SJ300	Copy Function	Multilingual
OPE-S		○	○ (Standard for SJ300)		
OPE-SR/SRE	○	○	○ (OPE-SRE: Standard for SJ300 UL version)		
SRW-0EX		○	○	○	○

★OPE-SRE: English overlay

●CABLE FOR OPERATOR

Model	Cable Length
ICS-1	1m (3.3ft)
ICS-3	3m (9.8ft)

■Multilingual Operator with Copy Function SRW-0EX (Optional)

■DIMENSIONS

[Unit:mm (inch)]
Inches for reference only

●OPE-S/SR/SRE

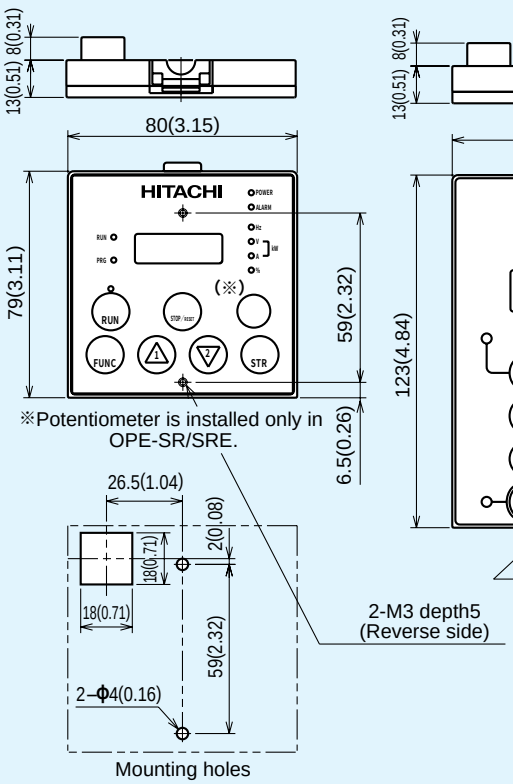

●SRW-0EX

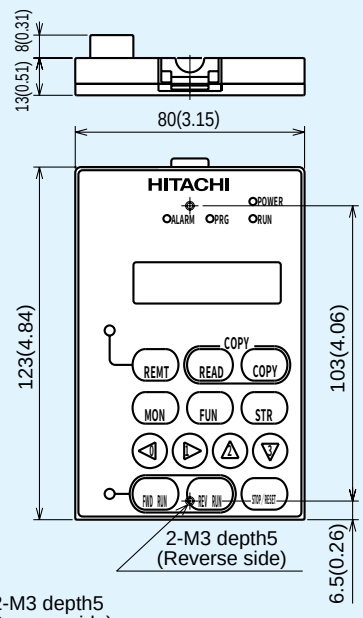

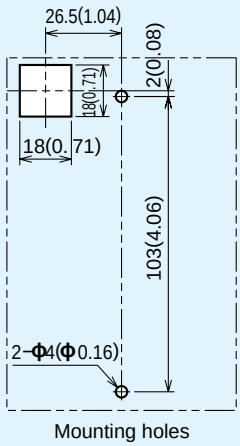

●ICS-1, 3

(Cable for OPE-S/SR/SRE and SRW-0EX)

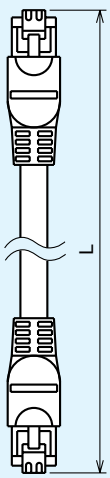

Model	Cable Length
ICS-1	1m (3.3ft)
ICS-3	3m (9.8ft)

■EXPANSION CARD

Up to two expansion cards can be installed inside the SJ300.

Digital Input Expansion Card

SJ-DG

Output frequency, acceleration time, deceleration time, torque limit, and orientation position*1 can be set by a digital output device such as PLC, etc. (Binary or BCD)

●Connecting Diagram

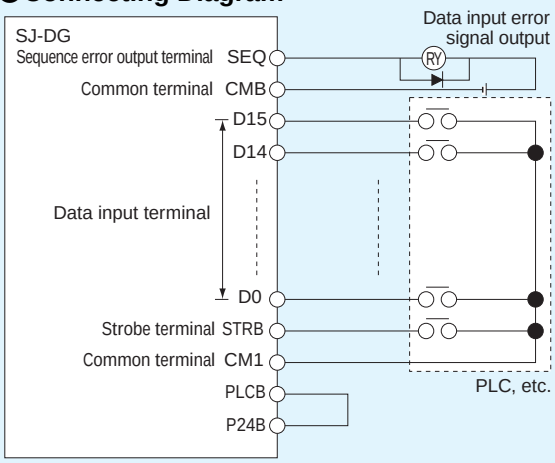

●Data Bit Configuration

Item	Mode 1	Mode 2
D15	Data classification code	Setting data
D14		
D13		
D12		
D11		
D10		
D9		
D8		
D7	Setting data: Data can be set by either 16-bit binary or 4-digit BCD. [Input data is divided into upper 8-bit and lower 8-bit.]	Data can be set by either 16-bit binary or 4-digit BCD.
D6		
D5		
D4		
D3		
D2		
D1		
D0		

*Data input mode is selected by the dip switch on the expansion card.

●Standard Specifications

Item		Specification	
Input	Data setting signal	NO contact input (sink/ source compatible)	D0,D1, … between D15 and PLCB
	Strobe signal		Between STRB and PLCB
Output	Sequence error signal (Data input error signal)	Open collector output (sink/ source compatible)	DC+27V 50mA max., between SEQ and CMB
Power supply	Power supply for interface	DC+24V 90mA max., between P24B and CM1	

*1 Orientation position setting is enabled when the feedback PCB (SJ-FB) is used together.

Feedback Expansion Card

SJ-FB

Detecting motor speed with an encoder and receiving the feedback suppress speed fluctuation and realize high-precision operation.
Positioning control and orientation with pulse-train input are also possible.

●Application Examples

High-precision operation for the main motor of coil winding machine, wire drawing machine, truck, extruder, etc.

●Connecting Diagram (Example)

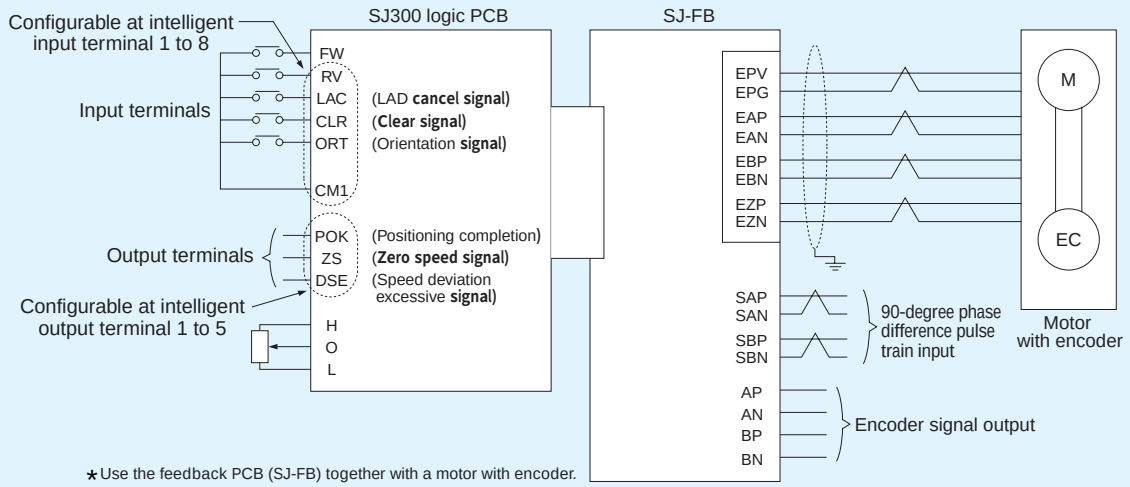

*Use the feedback PCB (SJ-FB) together with a motor with encoder.

●General Specifications

Item		Specification
Speed control	Encoder feedback	Standard: 1024-pulse/r Maximum input pulse: 100k-pulse/s
	Speed control method	Proportional-Integral(PI) / Proportional(P) control
Position control	Positioning command	A-, B-phase, 90-degree phase difference input (By A-, B-, and Z-phase encoder), Maximum input pulse: 100k-pulse/s
	Electronic gear	**Pulse** ratio **A/B (A, B: Setting range of 1–9999) 1/50≦A/B≦20**
Orientation	Stop position	4096 splitting per motor's single revolution **(When using standard encoder)**
	Speed	Orientation speed and rotational direction can be set
Protective functions		Encoder cable disconnection protection, Over-speed protection, Positioning error

DeviceNet™ EXPANSION CARD

SJ-DN

SJ-DN has DeviceNet™ functions, and it can perform network communication such as RUN/STOP, status monitoring, parameter setting, etc. by connecting with an upper level controller.
Expensive hard-wiring can be eliminated for space saving and cost reduction, and installation/ replacement within the system can be easily done.

●Specifications

General data	Applicable DeviceNet specification	Volume 1-Relesse 2.0	Volume 2-Relesse 2.0
	Vendor name	Hitachi, Ltd.	Vendor ID=74
	Device profile name	Slave DC Drive	Profile No.=13
Physical conformance data	Network consumption current	50mA	
	Connector type	Open connector	
	Isolation of physical layer	Yes	
	Support LED	Module status / network status	
	MAC ID setting	By digital operator	
	Default MAC ID	63	
	Transmission baud rate setting	By digital operator	
	Support transmission baud rate	125k/250k/500k	
Communication data	Pre-defined master/slave connection set	Group 2 only server	
	UCMM Support	None	
	Support connection	Explicit message connection, Polled I/O connection	
	Explicit message fragmentation	Yes	

●Dimensional drawings [Unit:mm]

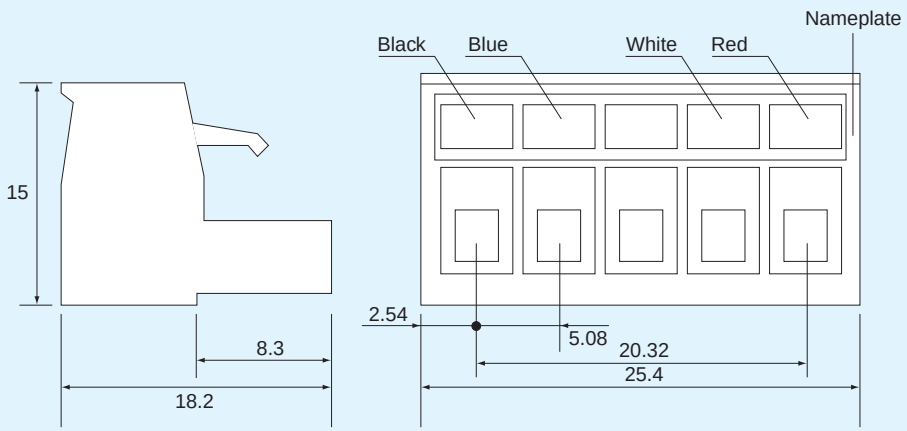

●Cable connection

No	Signal	Cable color
1	V–	Black
2	CAN_L	Blue
3	Drain	—
4	CAN_H	White
5	V+	Red

Note: Communication power supply (24VDC) is required in system configuration.

DeviceNet is a trademark of Open DeviceNet Vendor Association.

PROFIBUS® Expansion Card

SJ-PBT

●Specifications

Support profile	Variable Speed Drive (Order no. 3.072)
Transmission method	RS-485
Connector type	Open connector (6 poles)
Support file	GSD file
ASIC chip	VPC3+ (Made by Profichip)
Maximum bus length	100m at 12Mbps, 1200m at 9.6kbps(No rooter used for both conditions)
Maximum number of connectable nodes	126 (Rooter used), 32(No rooter used)
Termination support	Yes (Bus topology termination enable)
Support baud rate	9.6kbps to 12Mbps (Baud rate auto-detecting function equipped)
Communication specification	Master/slave
Support LED	Fieldbus ON/Off-line Fieldbus diagnosis Communication Status

●Connector specifications

Manufacturer	Model Code
Phoenix Contact	MC 1.5/6-ST-3.81

●Cable connection

No	Signal name	Function
1	NET-A	NET-A input connection
2	NET-B	NET-B input connection
3	Shield	Cable shield connection
4	NET-A	NET-A input connection
5	NET-B	NET-B input connection
6	Shield	Cable shield connection

Note: PROFIBUS is a registered trademark of Profibus Nutzer Organization.

●Dimensional drawings [Unit: mm]

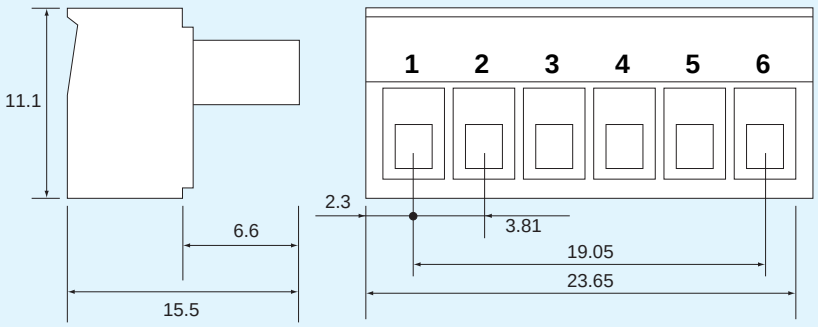

LONWORKS® Expansion Card

SJ-LW

●Specifications

Device Class	Variable Speed Drive
Transmission method	FTT-10A (Free Topology Twisted Pair Transceiver)
Connector type	Open connector
LonMark Object Support	0000-Node Object 6010-Variable Speed Motor Drive
Support file	XIF
Neuron Chip	TMPN3120FE5M
Max. bus length	2700m
Max. length between nodes	500m
Max. nodes number	32,385
Termination support	FT (Free topology termination enable) NO (Termination disable) BUS (Bus topology termination enable)
Support transmission baudrate	78kbps (Fixed)
Data type	Pier to Pier
Support LED	Power /Inverter LON diagnosis/ Service Communication Status

●Connector specifications

Manufacturer	Model Code
Phoenix Contact	MC 1.5/3-ST-3.81

●Dimensional drawings [Unit: mm]

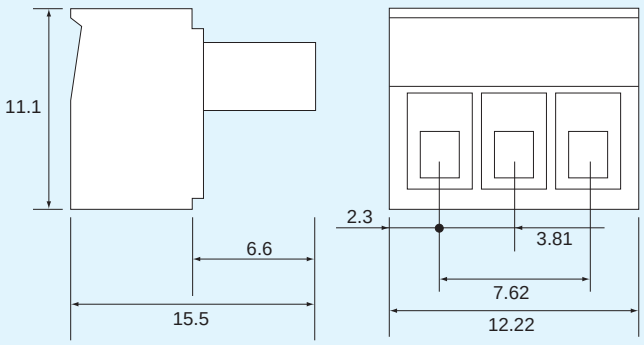

●LONWORKS is a registered trademark of Echelon Corporation

●Cable connection

No	Signal name	Function
1	Shield	Cable shield connection
2	NET-A	NET-A input connection
3	NET-B	NET-B input connection

Note: Network function must be supported by the software of the inverter used with SJ-DN, SJ-PBT, or SJ-LW.
For the detail, please contact Hitachi sales office.

■ACCESSORIES MATRIX FOR SJ300 SERIES

	Capacity (kW/HP)	Model name	DC reactor (see page 31)	Input side AC reactor (see page 32)	EMI filter (see page 33)	Ferrite core (see page 33)	Radio noise filter (see page 35)	Radio noise filter (Capacitor filter) (see page 35)
3-phase 200V class	0.4 / 1/2	SJ300-004LFU	DCL-L-0.4	ALI-2.5L2	NF-CEH7	FC-H40	ZCL-A ZCL-B40	CFI-L
	0.75 / 1	SJ300-007LFU	DCL-L-0.7					
	1.5 / 2	SJ300-015LFU	DCL-L-1.5		NF-CEH10			
	2.2 / 3	SJ300-022LFU	DCL-L-2.2	ALI-5.5L2	NF-CEH20			
	3.7 / 5	SJ300-037LFU	DCL-L-3.7					
	5.5 / 7.5	SJ300-055LFU	DCL-L-5.5	ALI-11L2	NF-CEH30			
	7.5 /10	SJ300-075LFU	DCL-L-7.5		NF-CEH40			
	11 / 15	SJ300-110LFU	DCL-L-11	ALI-22L2	NF-CEH60	FC-H300		
	15 / 20	SJ300-150LFU	DCL-L-15		NF-CEH80			
	18.5 / 25	SJ300-185LFU	DCL-L-22	ALI-33L2	NF-CEH100			
	22 / 30	SJ300-220LFU	DCL-L-22		NF-CEH150			
	30 / 40	SJ300-300LFU	DCL-L-30	ALI-50L2				
	37 / 50	SJ300-370LFU	DCL-L-37		NF-CEH200			
	45 / 60	SJ300-450LFU	DCL-L-45	ALI-75L2	NF-CEH250			
	55 / 75	SJ300-550LFU	DCL-L-55		NF-CEH300			
3-phase 400V class	0.75 / 1	SJ300-007HFU/E	DCL-H-0.7	ALI-2.5H2	NF-CEH7	FC-H40	ZCL-A ZCL-B40	CFI-H
	1.5 / 2	SJ300-015HFU/E	DCL-H-1.5					
	2.2 / 3	SJ300-022HFU/E	DCL-H-2.2	ALI-5.5H2				
	3.7 / 5	SJ300-037HFU/E	DCL-H-3.7		NF-CEH10			
	5.5 / 7.5	SJ300-055HFU/E	DCL-H-5.5	ALI-11H2	NF-CEH20			
	7.5 / 10	SJ300-075HFU/E	DCL-H-7.5					
	11 / 15	SJ300-110HFU/E	DCL-H-11	ALI-22H2	NF-CEH30			
	15 / 20	SJ300-150HFU/E	DCL-H-15		NF-CEH40			
	18.5 / 25	SJ300-185HFU/E	DCL-H-22	ALI-33H2	NF-CEH50	FC-H300		
	22 / 30	SJ300-220HFU/E	DCL-H-22		NF-CEH60			
	30 / 40	SJ300-300HFU/E	DCL-H-30	ALI-50H2	NF-CEH80			
	37 / 50	SJ300-370HFU/E	DCL-H-37		NF-CEH100			
	45 / 60	SJ300-450HFU/E	DCL-H-45	ALI-75H2	NF-CEH150			
	55 / 75	SJ300-550HFU/E	DCL-H-55					

* To meet European EMC class B limits, a ferrite core is required in addition to the NF-CEH filter.

DC Reactor (For harmonics suppression)

DCL-□-□□

●Model Name Configuration

DCL-L-0.2

- Applicable inverter capacity (kW)
- Voltage L : 200V class
  H: 400V class

●Connecting Diagram

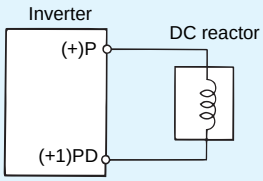

●Dimensional drawings

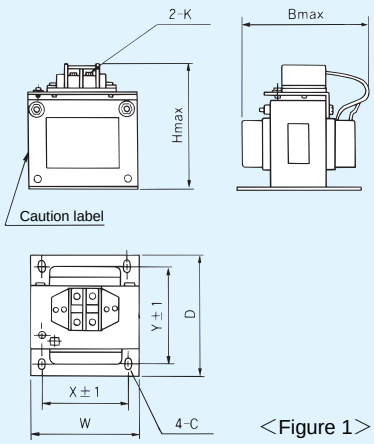

<Figure 1>

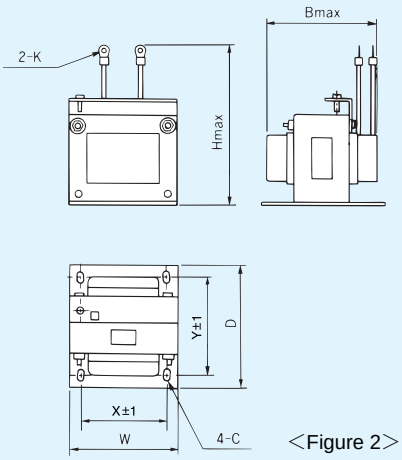

<Figure 2>

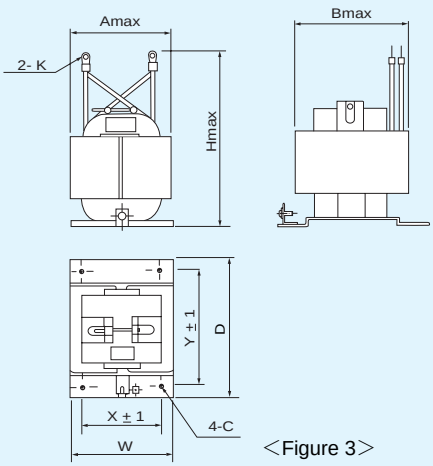

<Figure 3>

Inverter power supply	Model name	Figure	Dimensions(mm) Amax and Bmax are coil dimension.									Weight (kg)	Applicable inverter capacity (kW/HP)
			W	D	H	A	B	X	Y	C	K		
1-/3-phase 200V class	DCL-L-0.2	Figure 1	66	90	98	-	85	56	72	5.2×8	M4	0.8	0.2/¼
	DCL-L-0.4		66	90	98	-	95	56	72	5.2×8	M4	1.0	0.4/½
	DCL-L-0.7		66	90	98	-	105	56	72	5.2×8	M4	1.3	0.75/1
	DCL-L-1.5		66	90	98	-	115	56	72	5.2×8	M4	1.6	1.5/2
	DCL-L-2.2		86	100	116	-	105	71	80	6×9	M4	2.1	2.2/3
	DCL-L-3.7		86	100	118	-	120	71	80	6×9	M4	2.6	3.7/5
	DCL-L-5.5	Figure 2	111	100	210	-	110	95	80	7×11	M5	3.6	5.5/7.5
	DCL-L-7.5		111	100	212	-	120	95	80	7×11	M6	3.9	7.5/10
	DCL-L-11		146	120	252	-	110	124	96	7×11	M6	6.5	11/15
	DCL-L-15		146	120	256	-	120	124	96	7×11	M8	7.0	15/20
	DCL-L-22	Figure 3	120	175	356	140	145	98	151	7×11	M8	9.0	18.5/25, 22/30
	DCL-L-30		120	175	386	155	150	98	151	7×11	M8	13.0	30/40
	DCL-L-37		120	175	390	155	150	98	151	7×11	M10	13.5	37/50
	DCL-L-45		160	190	420	180	150	120	168	7×11	M10	19.0	45/60
	DCL-L-55		160	190	424	180	180	120	168	7×11	M12	24.0	55/75
3-phase 400V class	DCL-H-0.4	Figure 1	66	90	98	-	85	56	72	5.2×8	M4	0.8	0.4/½
	DCL-H-0.7		66	90	98	-	95	56	72	5.2×8	M4	1.1	0.75/1
	DCL-H-1.5		66	90	98	-	115	56	72	5.2×8	M4	1.6	1.5/2
	DCL-H-2.2		86	100	116	-	105	71	80	6×9	M4	2.1	2.2/3
	DCL-H-3.7		86	100	116	-	120	71	80	6×9	M4	2.6	3.7/5
	DCL-H-5.5		111	100	138	-	110	95	80	7×11	M4	3.6	5.5/7.5
	DCL-H-7.5		111	100	138	-	115	95	80	7×11	M4	3.9	7.5/10
	DCL-H-11	Figure 2	146	120	250	-	105	124	96	7×11	M5	5.2	11/15
	DCL-H-15		146	120	252	-	120	124	96	7×11	M6	7.0	15/20
	DCL-H-22	Figure 3	120	175	352	140	145	98	151	7×11	M6	9.5	18.5/25, 22/30
	DCL-H-30		120	175	356	140	145	98	151	7×11	M8	9.5	30/40
	DCL-H-37		120	175	386	155	150	98	151	7×11	M8	13.5	37/50
	DCL-H-45		160	190	416	180	145	120	168	7×11	M8	16.5	45/60
	DCL-H-55		160	190	416	190	170	120	168	7×11	M8	23.0	55/75

Input Side AC Reactor (For harmonics suppression, power factor improvement)

ALI-□□□

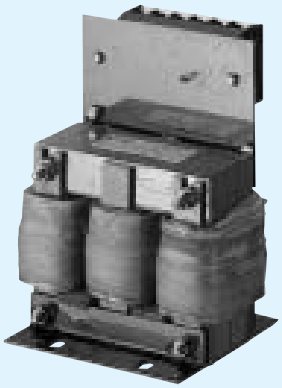

●Dimensional drawings

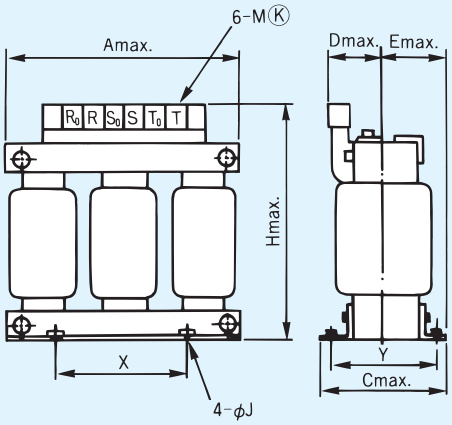

<Figure 1>

●Model Name Configuration

ALI-2.5L2

- Version (L: 3-phase 200V class / H: 3-phase 400V class)
- Inverter output capacity
- Input side

●Connecting Diagram

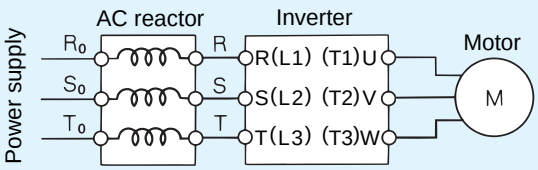

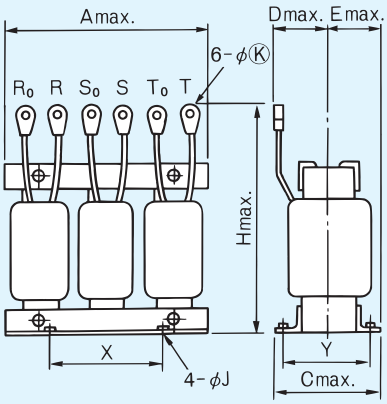

<Figure 2>

Inverter power supply	Model name	Figure	Dimensions (mm)							J	K	Applicable inverter capacity(kW/HP)(3-phase)
			A	C	D	E	H	X	Y			
3-phase 200V class	ALI-2.5L2	Figure 1	130	82	60	40	150	50	67	6	4	0.2/1/4 to 1.5/2
	ALI-5.5L2		140	98	60	40	150	50	75	6	4	2.2/3, 3.7/5
	ALI-11L2	Figure 2	160	103	70	55	170	60	80	6	5.3	5.5/7.5, 7.5/10
	ALI-22L2		180	113	75	55	190	90	90	6	8.4	11/15, 15/20
	ALI-33L2		180	113	85	60	230	125	90	6	8.4	18.5/25, 22/30
	ALI-50L2		260	113	85	60	290	100	90	7	8.4	30/40, 37/50
	ALI-75L2		260	144	110	80	290	125	112	7	8.4	45/60, 55/75
3-phase 400V class	ALI-2.5H2	Figure 1	130	82	60	40	150	50	67	6	4	0.75/1 to 1.5/2
	ALI-5.5H2		130	98	60	40	150	50	75	6	5	2.2/3, 3.7/5
	ALI-11H2		160	116	75	55	170	60	98	6	5	5.5/7.5, 7.5/10
	ALI-22H2	Figure 2	180	103	75	55	190	100	80	6	5.3	11/15, 15/20
	ALI-33H2		180	123	85	60	230	100	100	6	6.4	18.5/25, 22/30
	ALI-50H2		260	113	85	60	290	100	90	7	8.4	30/40, 37/50
	ALI-75H2		260	146	110	80	290	125	112	7	8.4	45/60, 55/75
	ALI-120H2		270	153	120	90	300	125	125	7	10.5	75/**100**, 90/**120**
	ALI-180H2		300	170	120	90	370	125	140	7	10.5	**110**/**150**, 132/**180**
	ALI-220H2		320	160	130	85	380	125	130	7	13	150/**200**

EMI Filter

NF-CEH□□

●Model Name Configuration

NF-CE-H 7

- Noise filter rated current
- Power supply H: 200/400V
- For European EMC compliance
- Series name

Model name	Rated current	Applicable inverter capacity		Weight (kg)
		400V class	200V class	
NF-CEH7	7A	Up to 2.2kW	0.4, 0.75kW	0.7
NF-CEH10	10A	3.7, 4.0kW	1.5kW	0.7
NF-CEH20	20A	5.5, 7.5kW	2.2, 3.7kW	1.0
NF-CEH30	30A	11kW	5.5kW	1.3
NF-CEH40	40A	15kW	7.5kW	1.4
NF-CEH50	50A	18.5kW	—	2.9
NF-CEH60	60A	22kW	11kW	3.0
NF-CEH80	80A	30kW	15kW	3.6
NF-CEH100	100A	37kW	18.5kW	4.3
NF-CEH150	150A	45, 55kW	22, 30kW	9.0
NF-CEH200	200A	75, 90kW	37kW	16.0
NF-CEH250	250A	110kW	45kW	16.0
NF-CEH300	300A	**132,150kW**	55kW	23.0

●Ferrite core (For EMC class B limits)

Model name	Applicable noise filter
FC-H40	NF-CEH7 to NF-CEH40
FC-H300	NF-CEH50 to NF-CEH300
ZCL-B75	NF-CEH200, NF-CEH250

●NF-CEH200–CEH300

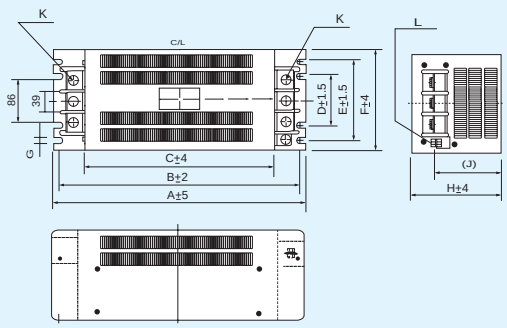

Model name	Dimension (mm)										
	A	B	C	D	E	F	G	H	J	K	L
NF-CEH200	450	430	338	100	190	230	7	180	(133)	M10	M8
NF-CEH250											
NF-CEH300	500	475	400	—	160	200	12	180	(133)	M10	M8

●Ferrite core FC-H40 [unit:mm]

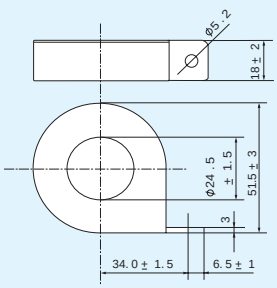

●NF-CEH7–CEH10 [unit:mm]

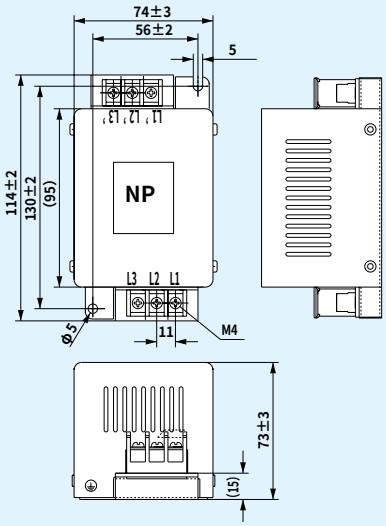

●NF-CEH20–CEH40 [unit:mm]

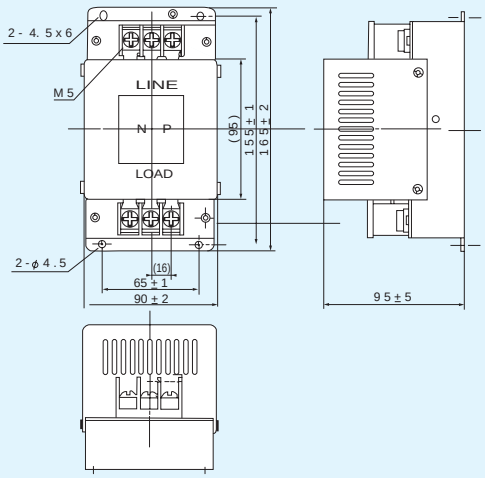

●NF-CEH50–CEH150

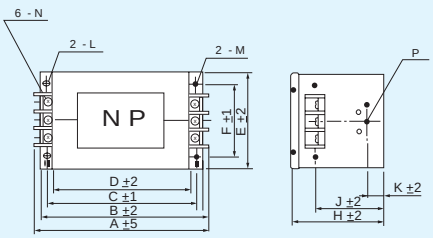

Model name	Dimension (mm)												
	A	B	C	D	E	F	H	J	K	L	M	N	P
NF-CEH50	217	200	185	170	120	90	115	85	20	R 2.75 L 7	φ5.5	M6	M4
NF-CEH60	217	200	185	170	120	90	115	85	20	R 2.75 L 7	φ5.5	M6	M4
NF-CEH80	217	200	185	170	120	90	115	85	20	R 2.75 L 7	φ5.5	M6	M4
NF-CEH100	254	230	215	200	150	120	115	80	30	R 3.25 L 8	φ6.5	M8	M6
NF-CEH150	314	300	280	260	200	170	130	90	35	R 3.25 L 8	φ6.5	M8	M6

●Ferrite core FC-H300 [unit:mm]

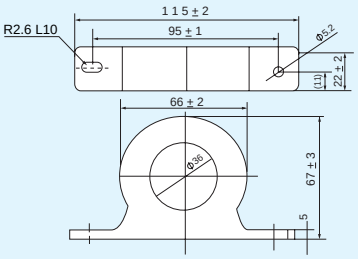

●Ferrite core ZCL-B75 [unit:mm]

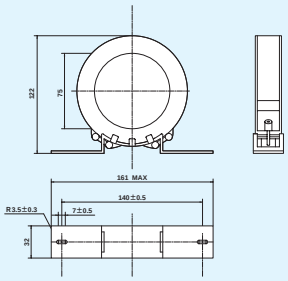

●To meet European EMC class A limits

Applicable inverter capacity		Model Name	Required ferrite Core
200V class	400V class		
0.4, 0.75kW	0.75, 1.5, 2.2kW	NF-CEH7	—
1.5kW	3.7, 4.0kW	NF-CEH10	—
2.2, 3.7kW	5.5, 7.5kW	NF-CEH20	—
5.5kW	11kW	NF-CEH30	—
7.5kW	15kW	NF-CEH40	—
—	18.5kW	NF-CEH50	—
11kW	22kW	NF-CEH60	—
15kW	30kW	NF-CEH80	—
18.5kW	37kW	NF-CEH100	—
22, 30kW	45, 55kW	NF-CEH150	—
37kW	75, 90kW	NF-CEH200	—
45kW	110kW	NF-CEH250	—
55, 75kW	—	NF-CEH300	—
—	132, 150kW	NF-CEH300	ZCL-B75

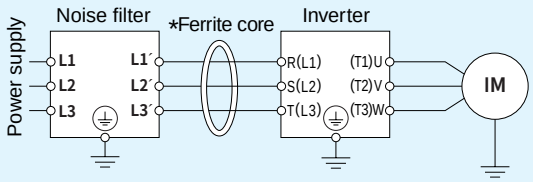

●To meet European EMC class B limits

Applicable inverter capacity		Model Name	Required ferrite Core at output side	Required ferrite Core at input side
200V class	400V class			
0.4, 0.75kW	0.75, 1.5, 2.2kW	NF-CEH7	FC-H40	—
1.5kW	3.7, 4.0kW	NF-CEH10	FC-H40	—
2.2, 3.7kW	5.5, 7.5kW	NF-CEH20	FC-H40	—
5.5kW	11kW	NF-CEH30	FC-H40	—
7.5kW	15kW	NF-CEH40	FC-H40	—
—	18.5kW	NF-CEH50	FC-H300	—
11kW	22kW	NF-CEH60	FC-H300	—
15kW	30kW	NF-CEH80	FC-H300	—
18.5kW	37kW	NF-CEH100	FC-H300	—
22, 30kW	45, 55kW	NF-CEH150	FC-H300	—
37kW	—	NF-CEH200	FC-H300	—
45kW	—	NF-CEH250	FC-H300	—
55, 75kW	—	NF-CEH300	FC-H300	—
—	75, 90kW	NF-CEH200	ZCL-B75	ZCL-B75
—	110kW	NF-CEH250	ZCL-B75	ZCL-B75

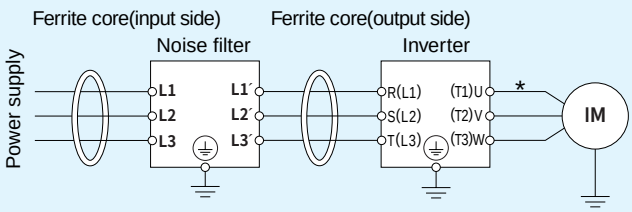

*Use shielded wires between the inverter and the motor, and make sure not to exceed 20m(66ft).

Radio Noise Filter (Zero-phase Reactor)

ZCL-A, ZCL-B40

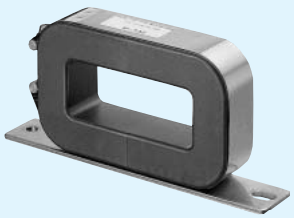

●Dimensional Drawings

[Unit:mm]

[ZCL-A]

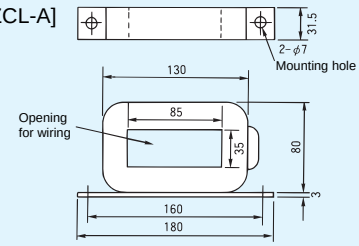

[ZCL-B40]

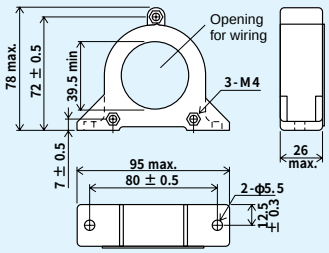

●Connecting Diagram

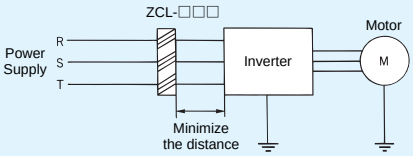

Note 1. Wind R, S and T in the same direction.
2. ZCL radio noise filter can be used on either input or output side.

Input Side Radio Noise Filter (Capacitor Filter)

CFI-L, CFI-H

●Dimensional Drawings

[Unit:mm]

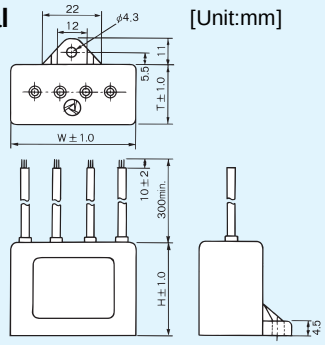

●Connecting Diagram

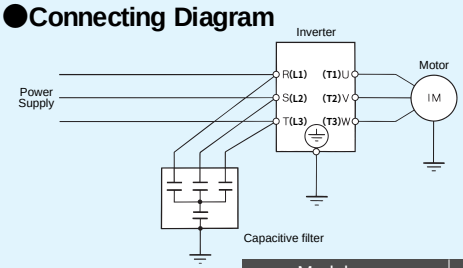

1. Do not connect the capacitor filter to the output side. Otherwise, the inverter or filter might be troubled.
2. Beware of a leakage current from capacitors and select a leakage breaker. (The leakage current is approximately 22 mA in case of 220 V AC, 60Hz, delta wiring or approximately 20 mA in case of 440 V, 60 Hz, star wiring.)
3. Fix the capacitors near the inverter so as to minimize the lead length. Do not suspend them.

Model name	W	H	T	Applicable inverter
CFI-L (250V rating)	48.0	35.0	26.0	200V class
CFI-H (500V rating)	55.0	47.0	31.0	400V class

Noise Filter for Inverter (Output Side Noise Filter)

ACF-C□□□

●Dimensional Drawings

[Figure 1]

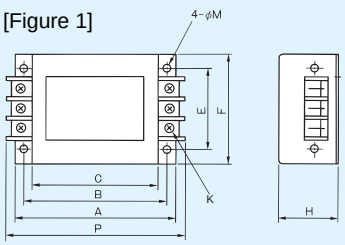

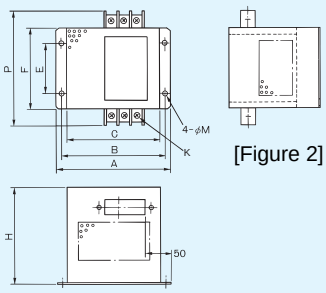

[Figure 2]

●Connecting Diagram

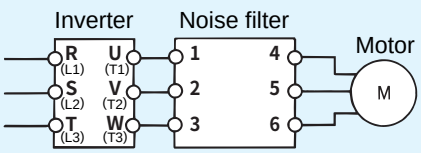

Voltage	Model name	Figure	Rated current (A)	Applicable motor (kW/HP, 4P)		Dimension(mm)								
				200V class	400V class	A	B	C	E	F	H	M	P	K
3-phase, 3-wire, rated voltage : 500VAC	ACF-C6	Figure 1	6	Up to 0.75/1	Up to 2.2/3	140	125	110	70	95	50	φ4.5	156	M4
	ACF-C12		12	1.5/2, 2.2/3	3.7/5	160	145	130	80	110	70	φ5.5	176	M4
	ACF-C25	Figure 2	25	3.7/5, 5.5/7.5	5.5/7.5–11/15	160	145	130	80	110	120	φ6.5	156	M4
	ACF-C50		50	7.5/10, 11/15	15/20, 22/30	200	180	160	100	160	150	φ6.5	212	M5
	ACF-C75		75	15/20	30/40, 37/50	220	200	180	100	180	170	φ6.5	232	M6
	ACF-C100		100	22/30	45/60	220	200	180	100	180	170	φ6.5	239	M8
	ACF-C150		150	30/40, 37/50	55/75, 75/100	240	220	200	150	200	170	φ6.5	259	M8

Dynamic Braking Unit

BRD-□□□-□□□

●Specifications

Specifications		200V class				400V class			
		BRD-S3	BRD-E3	BRD-E2-30K	BRD-E2-55K	BRD-EZ3	BRD-EZ2-30K	BRD-EZ2-55K	BRD-EZ3-110K
Discharging resistance	Short period (*1)	–	–	4Ω or more (20%ED)	2Ω or more (20%ED)	–	10Ω or more (10%ED)	6Ω or more (20%ED)	3Ω or more (20%ED)
	Continuous	17Ω	17Ω	6Ω	4Ω	34Ω	24Ω	12Ω	6Ω
Voltage	Operating Voltage	ON…362.5±5V OFF…355±5V [−5%, −10% settable]				ON…725±5V OFF…710±5V [−5%, −10% settable]			ON…737±5V OFF…720±5V [−5%,−10% settable]
Built-in resistor		120W 20Ω	120W 180Ω	–	–	120W 180Ω (2pcs. in series)	–	–	–
Built-in resistor allowable operating cycle (*2)		Continuous ON period 0.5sec. max. Allowable operating cycle 1/50 (0.5sec. ON, 25sec.OFF)	Continuous ON period 10sec. max. Allowable operating cycle 1/10 (10sec. ON, 90sec. OFF)	–	–	Continuous ON period 10sec. max. Allowable operating cycle 1/10 (10sec. ON, 90sec. OFF)	–	–	–
		6.6kW instantaneously 120W rated	0.7kW instantaneously 120W rated	–	–	1.5kW instantaneously 240W rated	–	–	–
Operation indicator		LED ON							
Protective functions	Built-in resistor	Relay is activated at 200℃ or more		–	–	Relay is activated at 200℃ or more	– (*3)	– (*3)	– (*3)
	Power module	–		Relay is activated at 100℃ or more		–	Relay is activated at 100℃ or more		
	Relay	Relay rating AC240V 3A (R load) 0.2A (L load), DC36V 2A							
Maximum number of parallel-connected operation		5		2		5	2		
General specifications	Ambient temperature	−10 to 50℃		−10 to 50℃		−10 to 50℃	−10 to 50℃		
	Storage temperature	−10 to 60℃							
	Humidity	20 to 90% (no condensation)							
	Vibration	0.6G or less		0.5G or less		0.6G or less	0.5G or less		
	Location	Altitude 1,000m or less, indoors (no corrosive gases or dust)							
	Color	Munsell 5Y7/1, cooling fins in base color of aluminum							

* 1: Short period means that the BRD unit operates for 1-minute in the 10-minute cycle (10%ED). That the BRD- EZ2-30K unit operates for 10-seconds in the 100-seconds cycle (10%ED).
* 2: When using an external resistor, the internal resistor connection has to be removed.
* 3: For resistor thermal protection, add a thermal relay that matches to the resistor.

[Unit:mm]

●BRD-S3, E3, EZ3

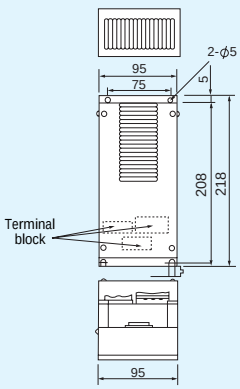

TM1 Terminal width 9. M4

N	RB	P	P

TM2 Terminal width 6. M3

SL1	SL2	MA1	MA2

TM3 Terminal width 7. M3

AL1	AL2	R1	R2

●BRD-E2-30K

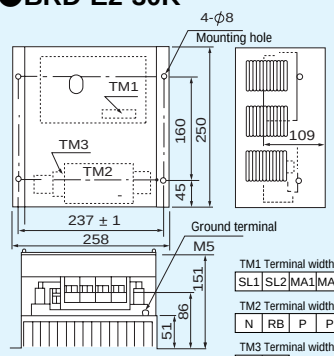

TM1 Terminal width 6. 4. M3

SL1	SL2	MA1	MA2	2		1

TM2 Terminal width 23. M8

N	RB	P	P

TM3 Terminal width 5. 9. M3

AL2	AL1

●BRD-E2-55K

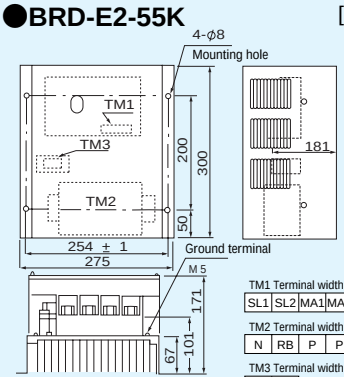

TM1 Terminal width 6. 4. M3

SL1	SL2	MA1	MA2	2		1

TM2 Terminal width 33. M10

N	RB	P	P

TM3 Terminal width 7. 5. M3

AL2	AL1

●BRD-EZ2-30K

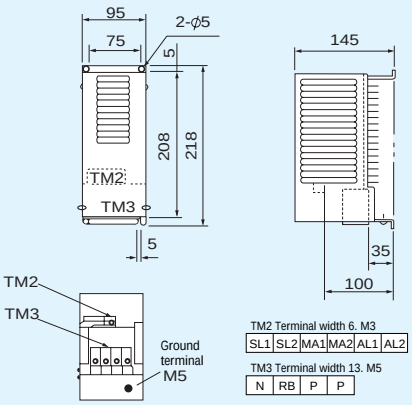

TM2 Terminal width 6. M3

SL1	SL2	MA1	MA2	AL1	AL2

TM3 Terminal width 13. M5

N	RB	P	P

●BRD-EZ2-55K

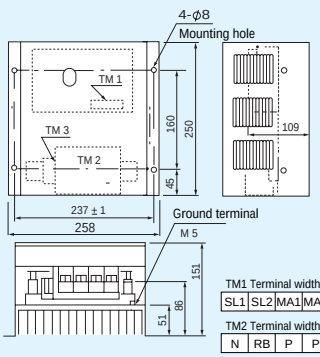

TM1 Terminal width 6. 4. M3

SL1	SL2	MA1	MA2	2		1

TM2 Terminal width 23. M8

N	RB	P	P

TM3 Terminal width 5. 9. M3

AL2	AL1

●BRD-EZ3-110K

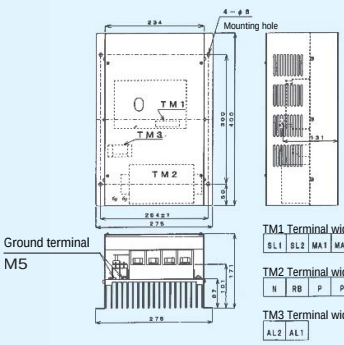

TM1 Terminal width 6. 4. M3

SL1	SL2	MA1	MA2

TM2 Terminal width 23. M8

N	RB	P	P

TM3 Terminal width 5. 9. M3

AL2	AL1

(Unit : mm)

Braking Resistor (Rear-mounted type)

RS □-□□□-□

[Unit: mm]

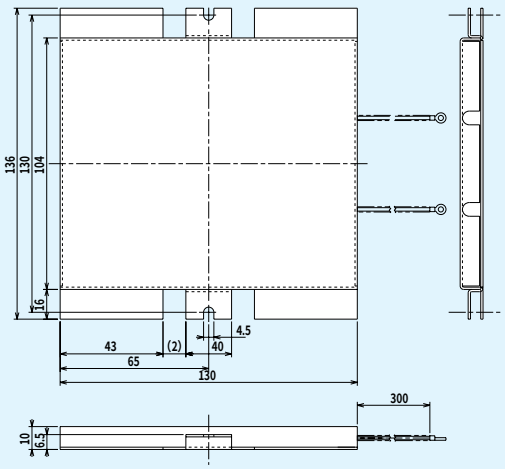

[Figure 1]

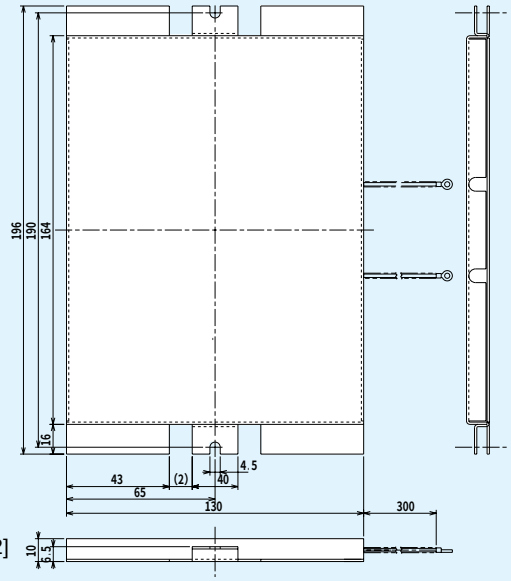

[Figure 2]

	Model name	Figure	Applicable inverter	Resistance value	Rated capacity	Instantaneous capacity	Allowable braking cycle (%ED)	Allowable continuous ON period	Overheat protection	Weight(kg)
200V class	RS-L-70-1	1	004-055LF□	50Ω	70W	2500W	1.25	2.5 sec.	Protected by the thermal fuse inside the resistor	0.4
	RS-L-70-2	1	015-055LF□	35Ω	70W	3700W	0.5	1.8 sec.		0.4
	RS-L-110-1	2	075-110LF□	17Ω	110W	7600W	0.3	1.4 sec.		0.5
400V class	RS-H-70-1	1	007-055HF□	150Ω	70W	3400W	0.6	2 sec.		0.4
	RS-H-70-2	1		100Ω	70W	5100W	0.3	1.3 sec.		0.4
	RS-H-110-1	2	075-110HF□	50Ω	110W	10000W	0.15	1 sec.		0.5

Braking Resistor (Small type)

JRB-□□□

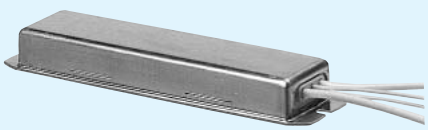

●Dimensional Drawings [Unit: mm]

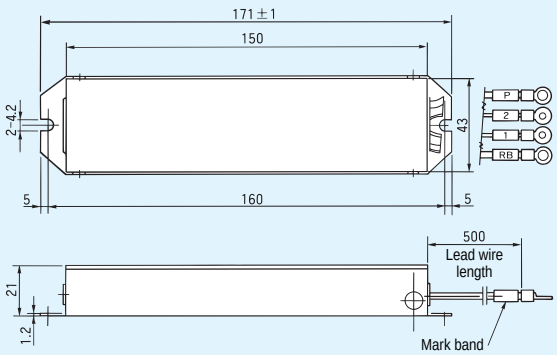

●Connecting Diagram

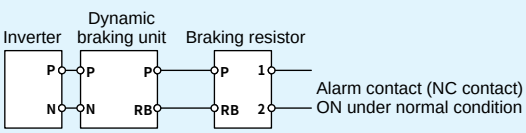

●Circuit Diagram

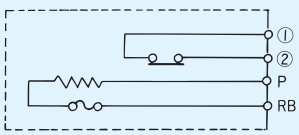

model name	Capacity	Resistance value	Allowable breaking cycle	Allowable continuous ON period	Weight(kg)
JRB-120-1	120	180Ω	5%	20sec.	0.27
JRB-120-2		100Ω	2.5%	12sec.	
JRB-120-3		50Ω	1.5%	5sec.	
JRB-120-4		35Ω	1.0%	3sec.	

Note 1: The internal thermal contact capacity is 250V AC, 2A max. It is on under normal condition (NC contact).
2: Prevents abnormal heat resulting from the incorrect use by internal temperature fuse. (recovery not possible).
3: When the temperature relay is activated, reduce regenerative energy by stopping the inverter or by increasing deceleration time.
4: Please connect the same two braking resistors with the series when using for class of 400V.

Braking Resistor (Standard type)

SRB-□□□

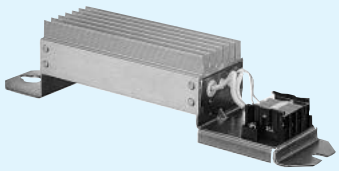

●Dimensional Drawings [Unit: mm]

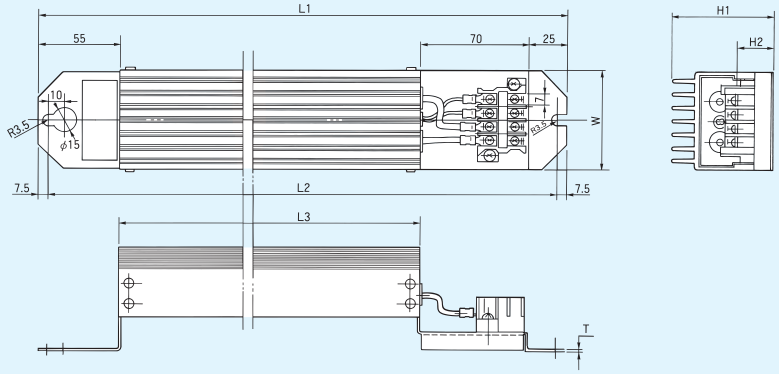

Note 1: The internal themal contact capacity is 250V AC, 2A max. It is on under nomal condition (NC contact).
2: Prevents abnormal heat resulting from the incorrect use by internal temperature fuse. (recovery not possible).
3: When the temperature relay is activated, reduce regenerative energy by stopping the inverter or by increasing deceleration time.

●Connecting Diagram

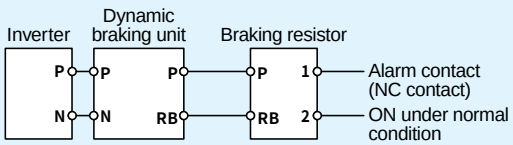

●Circuit Diagram

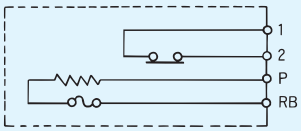

Model name	Dimension (mm)							Weight (kg)
	L1	L2	L3	H1	H2	W	T	
SRB 200-1	310	295	160	67	12	64	1.6	0.97
SRB 200-2	310	295	160	67	12	64	1.6	0.97
SRB 300-1	470	455	320	67	12	64	1.6	1.68
SRB 400-1	435	422	300	94	15	76	2.0	2.85

Model name	Capacity	Resistance value	Allowable braking cycle	Allowable continuous ON period
SRB 200-1	200W	180Ω	10%	30sec.
SRB 200-2		100Ω	7.5%	30sec.
SRB 300-1	300W	50Ω	7.5%	30sec.
SRB 400-1	400W	35Ω	7.5%	20sec.

Note 1: Please connect the same two braking resistors with the series when using for class of 400V.

Braking Resistor (Medium capacity type)

RB1, RB2, RB3

Model name	Resistance value (Ω)	Rated capacity (W)	Instantaneous capacity (W)	Allowable braking cycle (%)	Allowable continuous ON period (sec.)	Overheat protection	Figure	Weight (kg)
RB1	50	400	2600	10	10	Thermal relay (NC contact) inside the resistor is activated at abnormal high temperature. Contact rating AC240V, 3A(R load), 0.2A(L load) DC36V, 2A(R load)	1	2.5
RB2	35	600	3800	10	10		2	3.6
RB3	17	1200	7700	10	10		3	6.5

Note 1: For rated capacity, one cycle is within 100 sec.
2: Please connect the same two braking resistors with the series when using for class of 400V.

●Dimensional Drawings [Unit: mm]

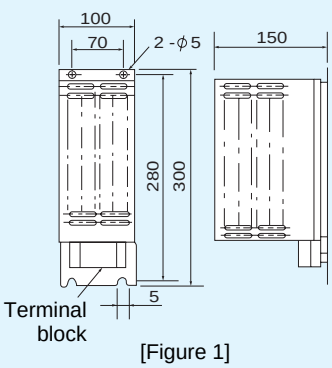

[Figure 1]

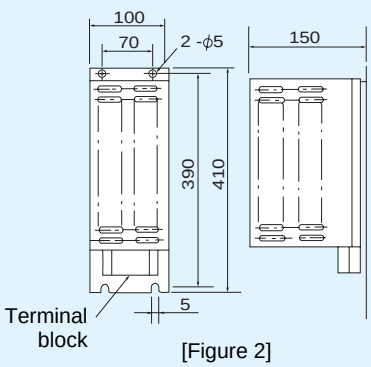

[Figure 2]

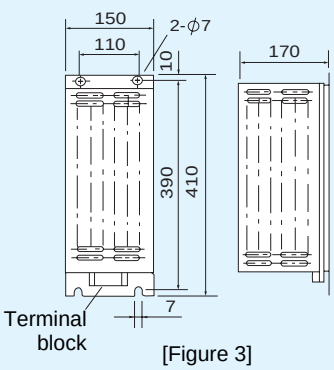

[Figure 3]

LCR Filter

The LCR filter smoothes inverter output current and voltage waveforms and reduces vibrations in the motor, noise from the motor, and radiated noise from the wires.
The LCR filter suppresses a voltage surge that occurs at the motor terminals when driving a 400V class motor.

●Combination of L, C, and R

[200V class]

Motor capacity (kW/HP)	AC reactor L	Capacitor C				Resistor R				
			W	H	D		W	H	D1	D2
1.5/2	ACL-L2-1.5	LPF2-H105	112	120	61	Not required	—	—	—	—
2.2/3	ACL-L2-2.2	LPF2-H225	112	130	61	Not required	—	—	—	—
3.7/5	ACL-L2-3.7	LPF2-H225	112	130	61	Not required	—	—	—	—
5.5/7.5	ACL-L2-5.5	LPF2-H335	112	150	61	Not required	—	—	—	—
7.5/10	ACL-L2-7.5	LPF2-H475	112	150	61	R-2-100	40±0.5	20.5±0.3	206±1.5	185±1
11/15	ACL-L2-11	LPF2-H685	157	120	92	R-2-100	40±0.5	20.5±0.3	206±1.5	185±1
15/20	ACL-L2-15	LPF2-H825	157	120	92	R-2-100	40±0.5	20.5±0.3	206±1.5	185±1
18.5/25	ACL-L2-18.5	LPF2-H156	157	180	92	R-2-150	64±0.5	55.5±1	212±1.5	170±1
22/30	ACL-L2-22	LPF2-H156	157	180	92	R-2-150	64±0.5	55.5±1	212±1.5	170±1
30/40	ACL-L2-30	LPF2-H186	157	200	92	R-2-150	64±0.5	55.5±1	212±1.5	170±1

[400V class]

Motor capacity (kW/HP)	AC reactor L	Capacitor C				Resistor R				
			W	H	D		W	H	D1	D2
1.5/2	ACL-H2-1.5	LPF2-H474	112	120	61	Not required	—	—	—	—
2.2/3	ACL-H2-2.2	LPF2-H474	112	120	61	Not required	—	—	—	—
3.7/5	ACL-H2-3.7	LPF2-H105	112	120	61	Not required	—	—	—	—
5.5/7.5	ACL-H2-5.5	LPF2-H105	112	120	61	Not required	—	—	—	—
7.5/10	ACL-H2-7.5	LPF2-H225	112	130	61	Not required	—	—	—	—
11/15	ACL-H2-11	LPF2-H225	112	130	61	Not required	—	—	—	—
15/20	ACL-H2-15	LPF2-H335	112	150	61	R-2-100	40±0.5	20.5±0.3	206±1.5	185±1
18.5/25	ACL-H2-18.5	LPF2-H475	112	150	61	R-2-150	64±0.5	55.5±1	212±1.5	170±1
22/30	ACL-H2-22	LPF2-H475	112	150	61	R-2-150	64±0.5	55.5±1	212±1.5	170±1
30/40	ACL-H2-33	LPF2-H475	112	150	61	R-2-150	64±0.5	55.5±1	212±1.5	170±1
37/50	ACL-H2-37	LPF2-H685	157	120	92	R-2-220	64±0.5	55.5±1	282±1.5	240±1
45/60	ACL-H2-45	LPF2-H685	157	120	92	R-2-220	64±0.5	55.5±1	282±1.5	240±1
55/75	ACL-H2-55	LPF2-H825	157	120	92	R-2-270	76±1	78±1	317±1.5	275±1

* 3 registers per set.
AC reactor L is the same as AC reactor for reducing vibration in the motor.

●Dimensional Drawings [Unit: mm]

[Capacitor]

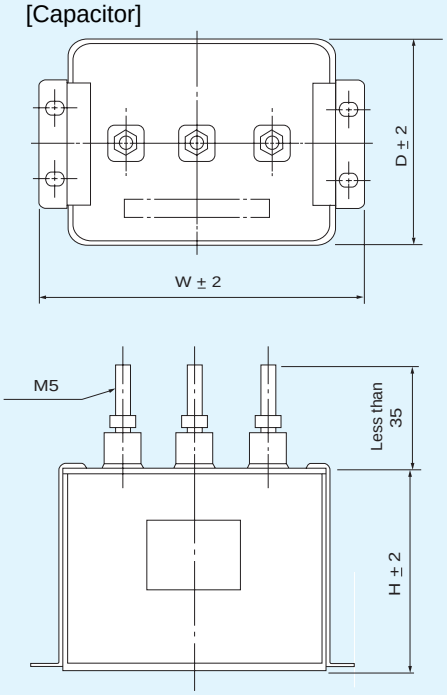

[Resistor (3 resistors per set)]

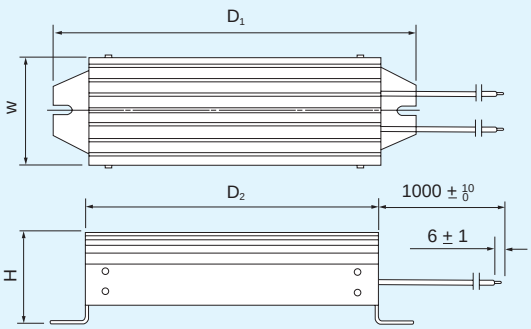

●Connecting Diagram

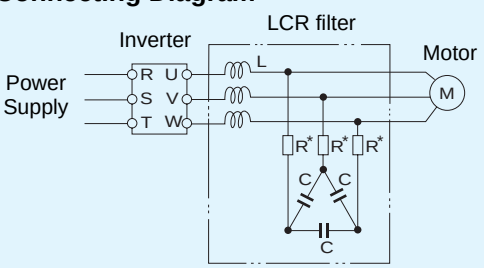

Output Side AC Reactor (For reducing vibration in the motor)

ACL-□-□□□

●Model Name Configuration

ACL-L2-0.4

- Motor capacity (In case of kW, 4P)
- Version
- Input voltage (L : 3-phase 200V / H: 3-phase 400V)

●Connecting Diagram

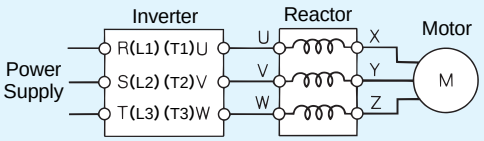

●Dimensional Drawings [Unit: mm]

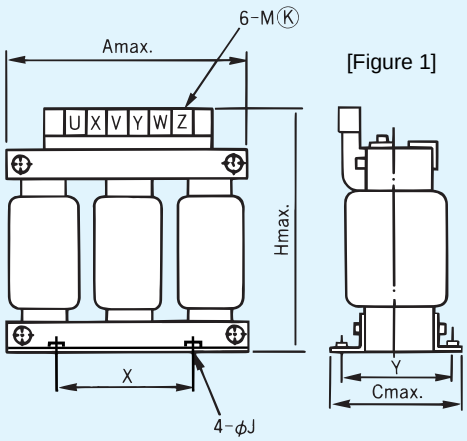

[Figure 1]

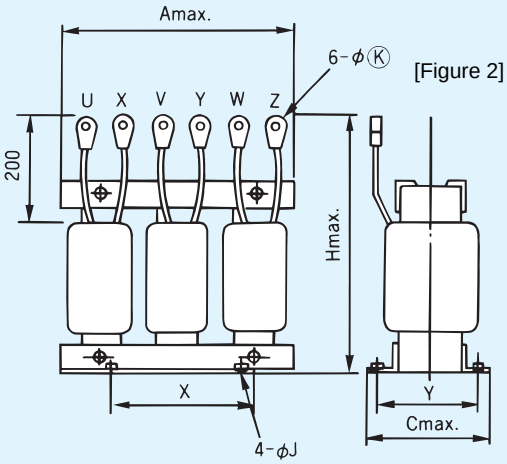

[Figure 2]

Voltage	Model name	Dimension (mm)					J	Ⓚ	Weight (kg)	Rated current (A)	Applicable inverter capacity (kW)	Figure
		A	C	H	X	Y						
200V	ACL-L2-0.4	115	75	115	40	65	6	4	2.7	3	0.2−0.4	Figure 1
	ACL-L2-0.75	140	90	138	50	80	6	4	4.2	5	0.75	
	ACL-L2-1.5	165	95	165	80	75	6	4	6.6	8	1.5	
	ACL-L2-2.2	190	107	210	90	90	6	4	11.5	11	2.2	
	ACL-L2-3.7	230	110	210	125	90	6	4	14.8	18	3.7	
	ACL-L2-5.5	230	112	330	125	90	6	5.3	15	24	5.5	Figure 2
	ACL-L2-7.5	250	128	345	125	112	7	6.4	22	32	7.5	
	ACL-L2-11	250	134	360	125	112	7	6.4	24	46	11	
	ACL-L2-15	280	157	385	140	125	7	6.4	37	64	15	
	ACL-L2-18.5	280	167	395	140	135	7	8.4	40.5	80	18.5	
	ACL-L2-22	280	172	390	140	140	7	8.4	43	95	22	
	ACL-L2-30	310	187	435	160	150	10	8.4	60	121	30	
	ACL-L2-37	310	187	445	160	150	10	8.4	62	145	37	
	ACL-L2-45	310	194	475	160	160	10	8.4	73	182	45	
	ACL-L2-55	310	202	475	160	180	10	11	76	220	55	
400V	ACL-H2-0.75	140	90	138	50	80	6	4	4.2	2.5	0.75	Figure 1
	ACL-H2-1.5	165	95	165	80	75	6	4	6.6	4.0	1.5	
	ACL-H2-2.2	190	107	210	90	90	6	4	11.5	6.0	2.2	
	ACL-H2-3.7	230	110	210	125	90	6	4	14.8	9.0	3.7	
	ACL-H2-5.5	230	112	220	125	90	6	4	15.5	13	5.5	
	ACL-H2-7.5	250	129	235	125	112	7	4	22	16	7.5	
	ACL-H2-11	250	135	345	125	112	7	5.3	24	23	11	Figure 2
	ACL-H2-15	280	157	380	140	125	7	6.4	37	32	15	
	ACL-H2-18.5	280	167	390	140	135	7	6.4	40	40	18.5	
	ACL-H2-22	280	172	385	140	140	7	6.4	43	48	22	
	ACL-H2-30	310	187	430	160	150	10	8.4	60	58	30	
	ACL-H2-37	310	187	445	160	150	10	8.4	62	75	37	
	ACL-H2-45	310	195	445	160	160	10	8.4	72	90	45	
	ACL-H2-55	310	202	445	160	180	10	8.4	75	110	55	
	ACL-H2-75	310	222	495	160	190	10	8.4	93	149	75	
	ACL-H2-90	350	257	515	160	200	10	11	117	176	90	
	ACL-H2-110	350	287	515	160	250	10	11	140	217	110	
	ACL-H2-132	350	242	460	160	200	10	11	135	260	132, 150	

Note: Rated current of output side AC reactor must exceed that of the motor to be connected.

Analog Operator Panel

OPE-4MJ2, OPE-8MJ2

●Standard Specifications

Model		OPE-4MJ2	OPE-8MJ2
Meter size		43mm square	80mm square
Meter indication		0–50/60/100/120Hz	0–50/60/100/120/200/240Hz
Frequency setting device		0.2W, 2kΩ	
Switch (FWD/STOP REV/STOP)		DC20mV–28V, 0.1mA–0.1A	
Weight (kg)		0.43	0.8
General specifications	Ambient temperature and humidity	-10–50℃ / 20–90% (RH) (no condensation)	
	Vibration	4.9m/s² (0.5G) 10-55Hz, conforming to JISC0911	
	Location	Altitude 1,000m or less, indoors (no corrosive gases or dust)	
	Enclosure	IP20	

●Internal Circuit Diagram

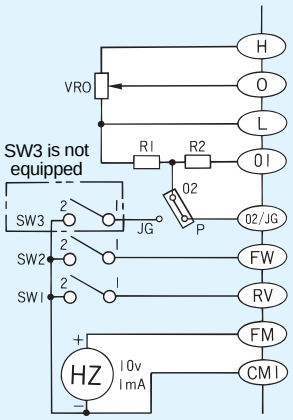

●Dimensional Drawings [Unit: mm]

[OPE-4MJ2]

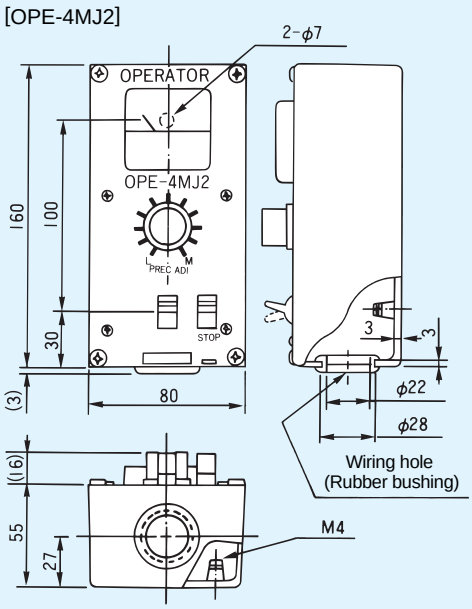

[OPE-8MJ2]

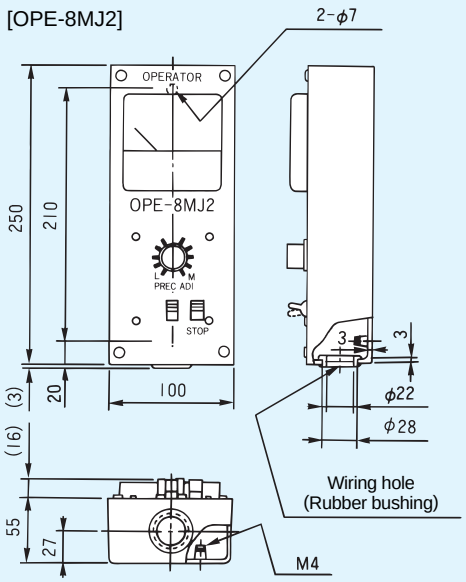

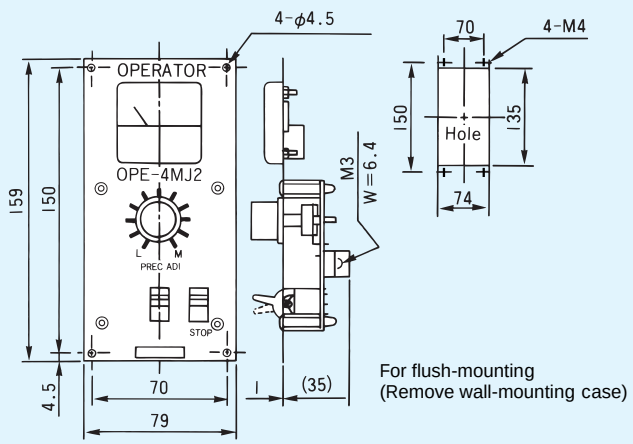

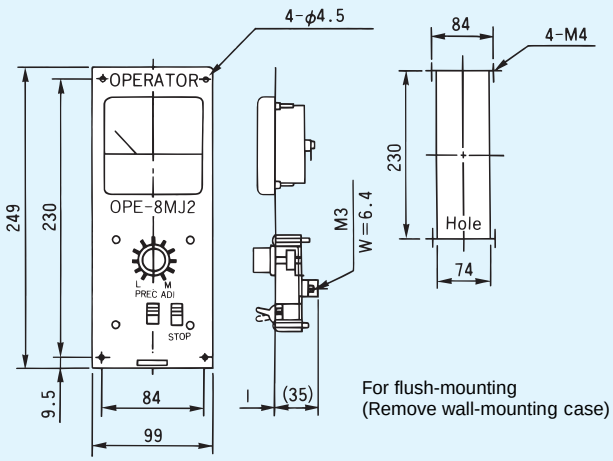

FOR COMPACT PANEL

Heat accumulation in the panel can be reduced by arranging inverter heat sink outside.

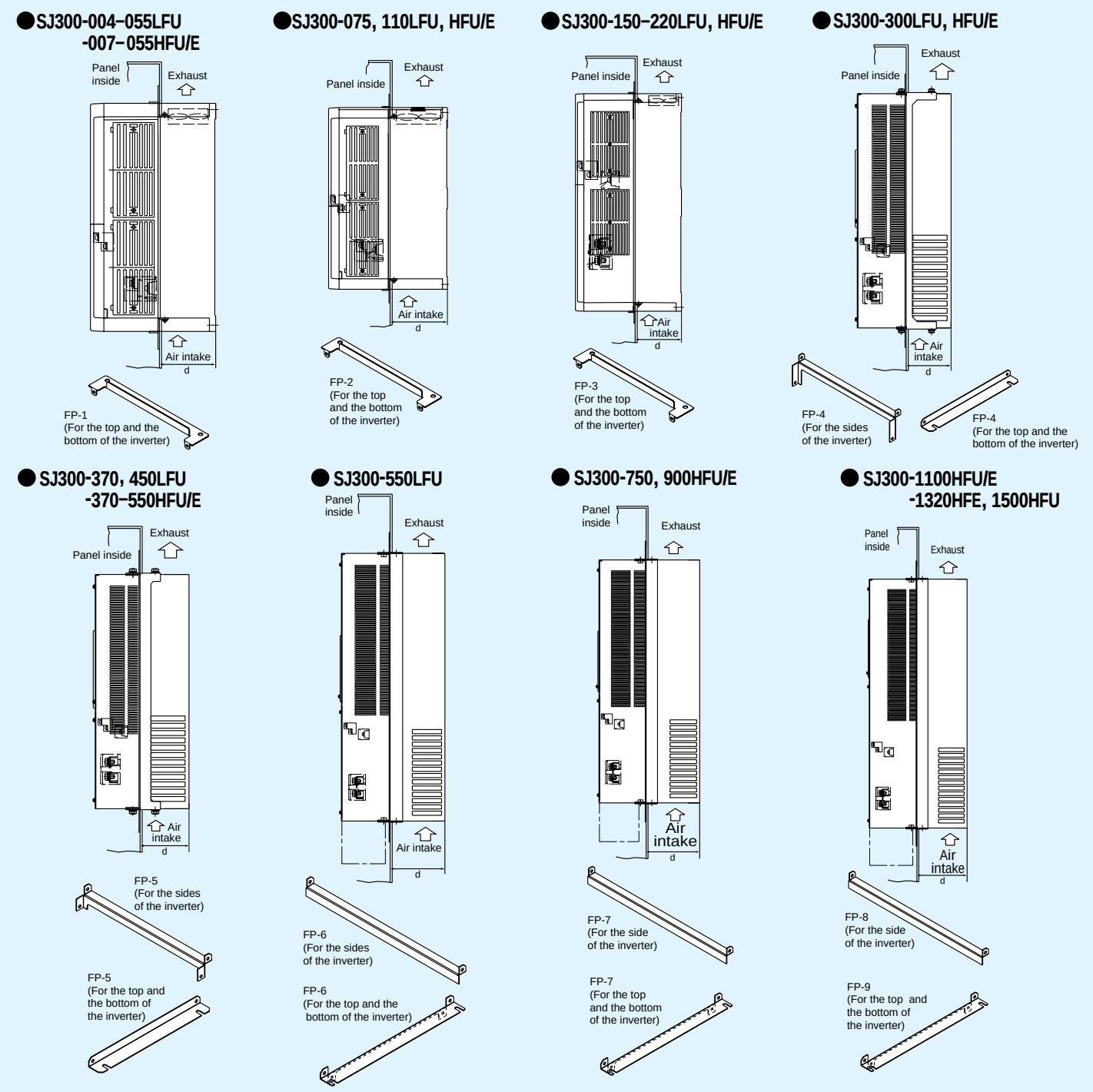

●Panel cutout

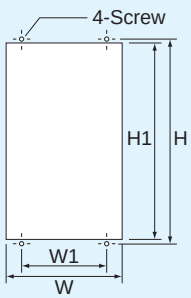

[Unit: mm]

Model	W	W1	H	H1	Screw	d
SJ300-004–055LFU -007–055LFU/E	146	130	280	260	M6	62
SJ300-075, 110LFU, HFU/E	206	189	285	265	M6	82
SJ300-150–220LFU, HFU/E	249	229	415	395	M6	83
SJ300-300LFU, HFU/E	320	300	524	505	M8	92
SJ300-370, 450LFU -370–550HFU/E	400	380	550	520	M10	102.7
SJ300-550LFU	490	510	710	670	M10	131
SJ300-750, 900HFU/E	400	420	710	690	M10	141
SJ300-1100HFU/E -1320HFE, 1500HFU	490	510	750	710	M10	137

TORQUE CHARACTERISTICS

High starting torque is accomplished even with a general-purpose motor by the torque calculation software that Hitachi has uniquely developed first in the industry.

- High starting torque of 200% or greater at 0.5Hz
- Continuous operating torque of 100% within 1:10 speed range. (Up to 3.7kW)

● Typical torque performance based on V/f pattern (below) is shown to the right.

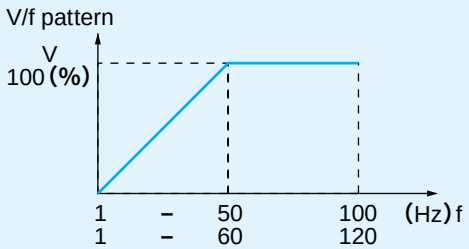

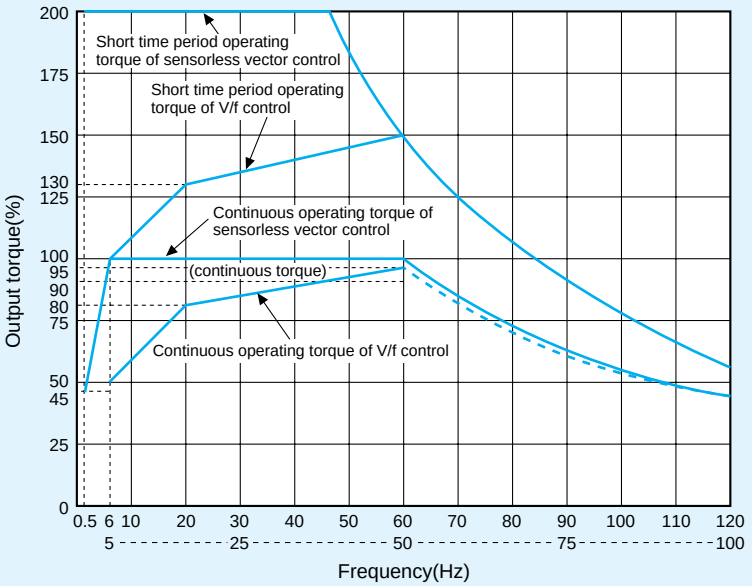

Example of SJ300-015LFU driving a Hitachi's 1.5kw 4-pole totally enclosed type motor (Base frequency of 60 Hz)
(Note: Torque characteristics may vary according to the model.)

DERATING DATA

The SJ300 series can be used at ambient temperature of −10℃ to 50℃.
However, when using at 50℃, derating is required.

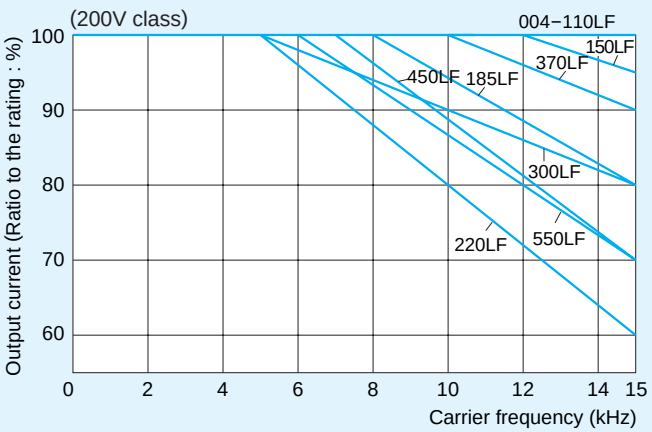

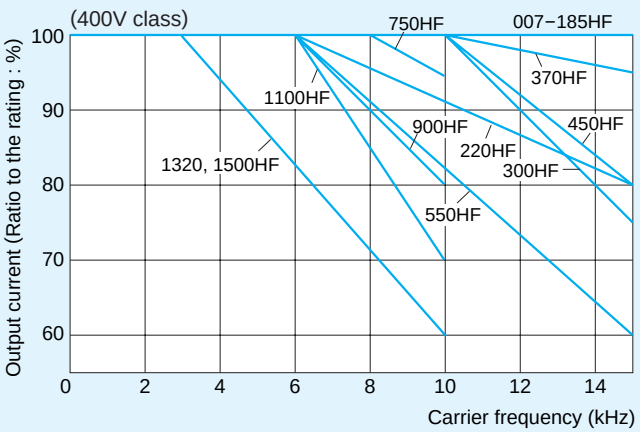

Derating data for ambient temperature 50℃, input voltage 240/480V.

●Application to Motors

[Application to general-purpose motors]

Operating frequency	The overspeed endurance of a general-purpose motor is 120% of the rated speed for 2 minutes (JIS C4,004). For operation at higher than 60Hz, it is required to examine the allowable torque of the motor, useful life of bearings, noise, vibration, etc. In this case, be sure to consult the motor manufacturer as the maximum allowable rpm differs depending on the motor capacity, etc.
Torque characteristics	The torque characteristics of driving a general-purpose motor with an inverter differ from those of driving it using commercial power (starting torque decreases in particular). Carefully check the load torque characteristic of a connected machine and the driving torque characteristic of the motor.
Motor loss and temperature increase	An inverter-driven general-purpose motor heats up quickly at lower speeds. Consequently, the continuous torque level (output) will decrease at lower motor speeds. Carefully check the torque characteristics vs speed range requirements.
Noise	When run by an inverter, a general-purpose motor generates noise slightly greater than with commercial power.
Vibration	When run by an inverter at variable speeds, the motor may generate vibration, especially because of (a) unbalance of the rotor including a connected machine, or (b) resonance caused by the natural vibration frequency of a mechanical system. Particularly, be careful of (b) when operating at variable speeds a machine previously fitted with a constant speed motor. Vibration can be minimized by (1) avoiding resonance points using the frequency jump function of the inverter, (2) using a tire-shaped coupling, or (3) placing a rubber shock absorber beneath the motor base.
Power transmission mechanism	Under continued, low-speed operation, oil lubrication can deteriorate in a power transmission mechanism with an oil-type gear box (gear motor) or reducer. Check with the motor manufacturer for the permissible range of continuous speed. To operate at more than 60 Hz, confirm the machine' s ability to withstand the centrifugal force generated.

[Application to special motors]

Gear motor	The allowable rotation range of continuous drive varies depending on the lubrication method or motor manufacturer. (Particularly in case of oil lubrication, pay attention to the low frequency range.)
Brake-equipped motor	For use of a brake-equipped motor, be sure to connect the braking power supply from the primary side of the inverter.
Pole-change motor	There are different kinds of pole-change motors (constant output characteristic type, constant torque characteristic type, etc.), with different rated current values. In motor selection, check the maximum allowable current for each motor of a different pole count. At the time of pole changing, be sure to stop the motor. Also see: Application to the 400V-class motor.
Submersible motor	The rated current of a submersible motor is significantly larger than that of the general-purpose motor. In inverter selection, be sure to check the rated current of the motor.
Explosion-proof motor	Inverter drive is not suitable for a safety-enhanced explosion-proof type motor. The inverter should be used in combination with a pressure-proof explosion-proof type of motor. *Explosion-proof verification is not available for SJ300 Series.
Synchronous (MS) motor High-speed (HFM) motor	In most cases, the synchronous (MS) motor and the high-speed (HFM) motor are designed and manufactured to meet the specifications suitable for a connected machine. As to proper inverter selection, consult the manufacturer.
Single-phase motor	A single-phase motor is not suitable for variable-speed operation by an inverter drive. Therefore, use a three-phase motor.

[Application to the 400V-class motor]

A system applying a voltage-type PWM inverter with IGBT may have surge voltage at the motor terminals resulting from the cable constants including the cable length and the cable laying method. Depending on the surge current magnification, the motor coil insulation may be degraded. In particular, when a 400V-class motor is used, a longer cable is used, and critical loss can occur, take the following countermeasures:
(1) install the LCR filter between the inverter and the motor,
(2) install the AC reactor between the inverter and the motor, or
(3) enhance the insulation of the motor coil.

●Notes on Use

[Drive]

Run/Stop	Run or stop of the inverter must be done with the keys on the operator panel or through the control circuit terminal. Do not operate by installing a electromagnetic contactor (Mg) in the main circuit.
Emergency motor stop	When the protective function is operating or the power supply stops, the motor enters the free run stop state. When an emergency stop is required or when the motor should be kept stopped, use of a mechanical brake should be considered.
High-frequency run	A max. 400Hz can be selected on the SJ300 Series. However, a two-pole motor can attain up to approx. 24,000 rpm, which is extremely dangerous. Therefore, carefully make selection and settings by checking the mechanical strength of the motor and connected machines. Consult the motor manufacturer when it is necessary to drive a standard (general-purpose) motor above 60 Hz. A full line of high-speed motors is available from Hitachi.

[Installation location and operating environment]

Avoid installation in areas of high temperature, excessive humidity, or where moisture can easily collect, as well as areas that are dusty, subject to corrosive gasses, mist of liquid for grinding, or salt. Install the inverter away from direct sunlight in a well-ventilated room that is free of vibration. The inverter can be operated in the ambient temperature range from -10 to 50℃.(Carrier frequency and output current must be reduced in the range of 40 to 50℃.)

[Main power supply]

Installation of an AC reactor on the input side	In the following examples involving a general-purpose inverter, a large peak current flows on the main power supply side, and is able to destroy the converter module. Where such situations are foreseen or the connected equipment must be highly reliable, install an AC reactor between the power supply and the inverter. Also, where influence of indirect lightning strike is possible, install a lightning conductor. (A) The unbalance factor of the power supply is 3% or higher. (Note) (B) The power supply capacity is at least 10 times greater than the inverter capacity (the power supply capacity is 500 kVA or more). (C) Abrupt power supply changes are expected. Examples: (1) Several inverters are interconnected with a short bus. (2) A thyristor converter and an inverter are interconnected with a short bus. (3) An installed phase advance capacitor opens and closes. In cases (A), (B) and (C), it is recommended to install an AC reactor on the main power supply side. Note: Example calculation with V_{RS} = 205V, V_{ST} = 201V, V_{TR} = 200V V_{RS} : R-S line voltage, V_{ST} : S-T line voltage, V_{TR} : T-R line voltage $\text{Unbalance factor of voltage} = \frac{\text{Max. line voltage (min.)} - \text{Mean line voltage}}{\text{Mean line voltage}} \times 100$ $= \frac{V_{RS} - (V_{RS} + V_{ST} + V_{TR})/3}{(V_{RS} + V_{ST} + V_{TR})/3} \times 100 = \frac{205 - 202}{202} \times 100 = 1.5\ (\%)$
Using a private power generator	An inverter run by a private power generator may overheat the generator or suffer from a deformed output voltage waveform of the generator. Generally, the generator capacity should be five times that of the inverter (kVA) in a PWM control system, or six times greater in a PAM control system.

●Notes on Peripheral Equipment Selection

Wiring connections		(1) Be sure to connect main power wires with R(L1), S(L2), and T(L3) terminals (input) and motor wires to U(T1), V(T2), and W(T3) terminals (output). (Incorrect connection will cause an immediate failure.) (2) Be sure to provide a grounding connection with the ground terminal (⏚).
Wiring between inverter and motor	Electromagnetic contactor	When an electromagnetic contactor is installed between the inverter and the motor, do not perform on-off switching during running operation.
	Thermal relay	When used with standard applicable output motors (standard three-phase squirrel-cage four-pole motors), the SJ300 Series does not need a thermal relay for motor protection due to the internal electronic protective circuit. A thermal relay, however, should be used: during continuous running outside a range of 30 to 60 Hz. for motors exceeding the range of electronic thermal adjustment (rated current). when several motors are driven by the same inverter; install a thermal relay for each motor. The RC value of the thermal relay should be more than 1.1 times the rated current of the motor. Where the wiring length is 10 m or more, the thermal relay tends to turn off readily. In this case, provide an AC reactor on the output side or use a current sensor.
Installing a circuit breaker		Install a circuit breaker on the main power input side to protect inverter wiring and ensure personal safety. Choose an inverter-compatible circuit breaker. The conventional type may malfunction due to harmonics from the inverter. For more information, consult the circuit breaker manufacturer.
Wiring distance		The wiring distance between the inverter and the remote operator panel should be 20 meters or less. When this distance is exceeded, use CVD-E (current-voltage converter) or RCD-E (remote control device). Shielded cable should be used on the wiring. Beware of voltage drops on main circuit wires. (A large voltage drop reduces torque.)
Earth leakage relay		If the earth leakage relay (or earth leakage breaker) is used, it should have a sensitivity level of 15 mA or more (per inverter).
Phase advance capacitor		Do not use a capacitor for power factor improvement between the inverter and the motor because the high-frequency components of the inverter output may overheat or damage the capacitor.

●High-frequency Noise and Leakage Current

(1) High-frequency components are included in the input/output of the inverter main circuit, and they may cause interference in a transmitter, radio, or sensor if used near the inverter. The interference can be minimized by attaching noise filters (option) in the inverter circuitry.
(2) The switching action of an inverter causes an increase in leakage current. Be sure to ground the inverter and the motor.

●Lifetime of Primary Parts

Because a DC bus capacitor deteriorates as it undergoes internal chemical reaction, it should normally be replaced every five years. Be aware, however, that its life expectancy is considerably shorter when the inverter is subjected to such adverse factors as high temperatures or heavy loads exceeding the rated current of the inverter.
The approximate lifetime of the capacitor is as shown in the figure at the right when it is used 12 hours daily (according to the " Instructions for Periodic Inspection of General-Purpose Inverter " (JEMA).)
Also, such moving parts as a cooling fan should be replaced. Maintenance inspection and parts replacement must be performed by only specified trained personnel.

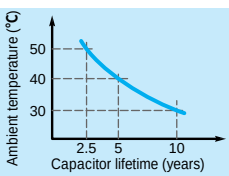

Precaution for Correct Usage

- Before use, be sure to read through the Instruction Manual to insure proper use of the inverter.
- Note that the inverter requires electrical wiring; a trained specialist should carry out the wiring.
- The inverter in this catalog is designed for general industrial applications. For special applications in fields such as aircraft, outer space, nuclear power, electrical power, transport vehicles, clinics, and underwater equipment, please consult with us in advance.
- For application in a facility where human life is involved or serious losses may occur, make sure to provide safety devices to avoid a serious accident.
- The inverter is intended for use with a three-phase AC motor. For use with a load other than this, please consult with us.

MEMO

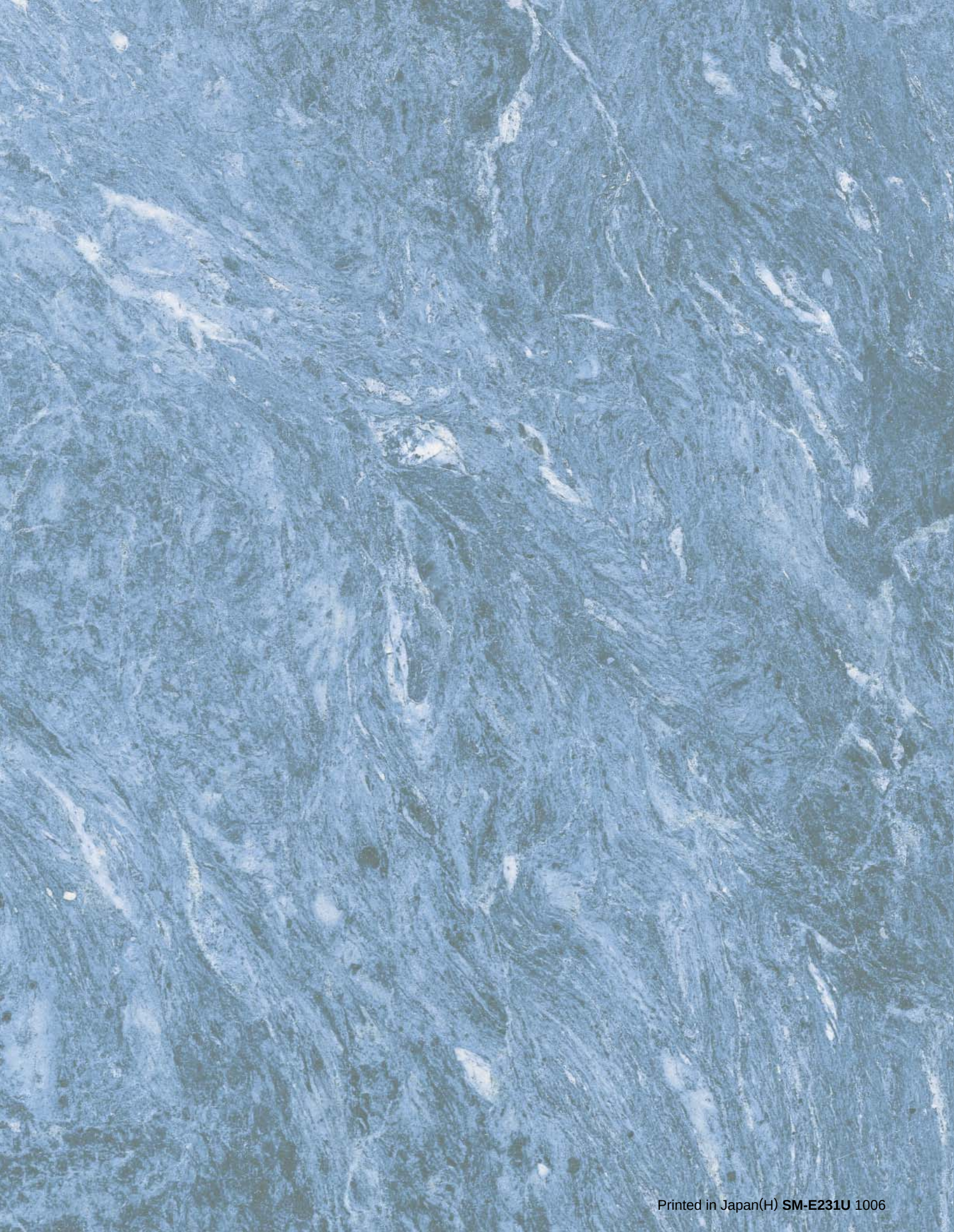

Printed in Japan(H) **SM-E231U** 1006